Looking-ahead in Backtracking Algorithms for Abstract Argumentation

Samer Nofal

Computer Science Department, German Jordanian University, Jordan

Katie Atkinson, Paul E. Dunne

Computer Science Department, University of Liverpool, United Kingdom

Abstract

We refine implemented backtracking algorithms for a number of problems related to Dung's argumentation frameworks. Under admissible, preferred, complete, stable, semi stable, and ideal semantics we add enhancements, what are so-called *global looking-ahead pruning* strategies, to the-state-of-the-art implementations of two problems. First, we tackle the extension enumeration problem: constructing some/all set(s) of acceptable arguments of a given argumentation framework. Second, we address the acceptance decision problem: deciding whether an argument is in some/all set(s) of accepted arguments of a given argumentation framework. The experiments that we report show that the speedup gain of the new enhancements is quite significant.

Keywords: Algorithms, Argumentation Semantics, Argument-based reasoning

1. Introduction

Our study is centered around abstract argumentation frameworks (AFs) introduced in [12]. AFs are an important model for reasoning over conflicting arguments [17]. Applications of AFs are likely in diverse domains such as medicine [16], e-government [3] and agriculture [20]. Argumentation semantics are concerned with defining the acceptable arguments in a given AF. There are a number of semantics for different motivations, see [2] for an excellent review. Several problems related to argumentation semantics are computationally hard [14]. In general, algorithms for solving these problems can be either direct or indirect; see the survey of [9]. Indirect approaches are reduction-based methods such that the problem at hand is translated to another form to be solved by an off-the-shelf system. Direct approaches are dedicated algorithms (e.g. backtracking algorithms) that search for a solution to the input AF. In this work we present improvements over the running-time efficiency of the state-of-the-art backtracking-based algorithms presented in [19, 18]. We highlight our contributions in two specific points:

1. Under a number of argumentation semantics (specified shortly) we enhance the backtracking search (for sets of acceptable arguments) by a more powerful pruning strategy, so-called the *global looking-ahead strategy*.
2. We set out a backtracking-based approach to deciding acceptance under different semantics, i.e. whether an argument is in some/all set(s) of acceptable arguments of a given AF, without *necessarily* enumerating all such sets.

More concisely, we present an improved backtracking-based implementation for different problems in argumentation frameworks. The source code of the implementation is available at `http://sourceforge.net/projects/argtools/`.

The main enhancement implemented is the *global looking-ahead pruning strategy*. Informally, this strategy enables a backtracking procedure (during traversing the search space) to regularly look-ahead for dead-ends (i.e. paths that do not lead to solutions) early enough such that considerable time is saved. Throughout the paper we precisely illustrate the new looking-ahead strategy. However, a high-level idea of the global looking-ahead is given in the next section after we present a necessary background on abstract argumentation frameworks.

2. Preliminaries

We recall the definition of abstract argumentation frameworks from [12].

Definition 1 (Dung's Argumentation Frameworks). *An abstract argumentation framework* AF *is a pair* (A, R) *where* A *is a set of abstract arguments and* $R \subseteq A \times A$ *is a binary relation, so-called the attack relation.*

We refer to $(x, y) \in R$ as x *attacks* y (or y is *attacked by* x). We denote by $\{x\}^-$ respectively $\{x\}^+$ the subset of A containing those arguments that attack (resp. are attacked by) the argument x, and so we use $\{x\}^\pm$ to represent the set $\{x\}^+ \cup \{x\}^-$; extending this notation in the natural way to *sets* of arguments, so that for $S \subseteq A$,

$$\begin{array}{lcl} S^- & = & \{\, y \in A \;:\; \exists\, x \in S \;\text{ s.t. }\; y \in \{x\}^- \} \\ S^+ & = & \{\, y \in A \;:\; \exists\, x \in S \;\text{ s.t. }\; y \in \{x\}^+ \} \end{array}$$

We say $S \subseteq A$ attacks $T \subseteq A$ (or T is attacked by S) if and only if $S^+ \cap T \neq \emptyset$. $S \subseteq A$ attacks $x \in A$ (or x is attacked by S) if and only if $x \in S^+$. Given a subset $S \subseteq A$, then

- $x \in A$ is *acceptable* w.r.t. S if and only if for every $(y, x) \in R$, there is some $z \in S$ for which $(z, y) \in R$.
- S is *conflict free* if and only if for each $(x, y) \in S \times S$, $(x, y) \notin R$.
- S is *admissible* if and only if it is conflict free and every $x \in S$ is acceptable w.r.t. S.

- S is a *preferred extension* if and only if it is a $\subseteq$-maximal admissible set.
- S is a *stable extension* if and only if it is conflict free and $S^+ = A \setminus S$.
- S is a *complete extension* if and only if it is an admissible set such that for each x acceptable w.r.t. S, $x \in S$.
- S is a *semi stable extension* if and only if it is admissible and $S \cup S^+$ is maximal (w.r.t. $\subseteq$).
- S is the *ideal extension* if and only if it is the maximal (w.r.t. $\subseteq$) admissible set that is contained in every preferred extension.

Preferred, complete and stable semantics are introduced in [12]. Ideal semantics is presented in [13] whereas semi stable semantics is presented in [24, 5]. Under these semantics, we are concerned with four problems:

P1. Given an AF $H = (A, R)$, enumerate all extensions of H.

P2. Given an AF $H = (A, R)$, build an extension of H.

P3. Given an AF $H = (A, R)$ and an argument $a \in A$, decide whether a is in some extension of H. In the literature this is called the *credulous acceptance problem*.

P4. Given an AF $H = (A, R)$ and an argument $a \in A$, decide whether a is in all extensions of H. This is called the *skeptical acceptance problem*.

To provide an overview of the new looking-ahead strategy consider for example the AF depicted in figure 1. Assume a backtracking procedure tries to build a preferred extension starting with the set $S = \{b\}$. Then, assume the procedure adds the argument e to S. At this point, our *new* global looking-ahead will detect that S is not possible to be expanded to a preferred extension because b can not be defended anymore; so the procedure will not try to extend further any set $T \supseteq \{b, e\}$, whereas previous backtracking algorithms may not discover such conflict in an early stage of the search process. Global looking-ahead is a simple yet powerful mechanism. In the following sections we explain how to incorporate the global looking-ahead in the state-of-the-art backtracking algorithms in a cost-effective way such that the overall performance of the algorithms is significantly improved.

The rest of the paper is structured as follows, in section 3 we present the algorithms for problems P1 & P2 along with a demonstration on the new enhancement. Then in section 4 we give the algorithms for problems P3 & P4 with the new features explained. In section 5 we show experimentally how the refined algorithms result in a better performance, and lastly we conclude the paper in section 6.

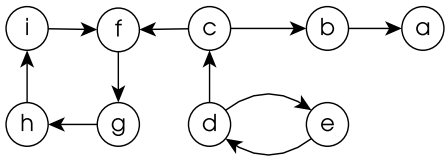

Figure 1: A backtracking procedure using the new looking-ahead will not try any $T \supseteq \{b, e\}$.

3. Enhanced looking-ahead in backtracking algorithms for the extension enumeration problem

We present respectively enhanced algorithms for listing preferred extensions, admissible sets, complete extensions, stable extensions, semi stable extensions, and lastly for constructing the ideal extension.

3.1. Preferred Semantics

Before presenting our algorithm in full, we give the reader a high-level notion of backtracking algorithms. As we are concerned with building extensions (i.e. subsets of arguments) consider the task of subset enumeration of $A = \{x, y, z\}$. Then, a backtracking search procedure *recursively* traverses a conceptual binary tree in which the root node is an empty set $\{\}$. Then the procedure forks to a left (respectively right) node by including (respectively excluding) some argument, say x. Thus, the left subtree represents all possible subsets $S \supseteq \{x\}$, whereas the right subtree represents all possible subsets $T \not\supseteq \{x\}$. See figure 2 that shows an implicit binary tree for a backtracking procedure constructing subsets of $\{x, y, z\}$. As the problems we tackle in this paper are in general around building set-inclusion maximal subsets then all of the algorithms of the paper traverse the binary tree (see figure 2) from left to right to make sure that maximal sets are visited first, and so maximality check is made more efficient. Referring to figure 2, to check whether $\{x\}$ is a subset of other solution subsets all we need is to compare $\{x\}$ with the constructed subsets so far. This is true because the subsets not constructed yet certainly do not include $\{x\}$. Concluding a general description of the backtracking search, we note that a search procedure backtracks and follows a different path if it detects that a solution can not be reached by pursuing the current path. Or the procedure simply backtracks to find another solution.

So far, we discussed argumentation semantics using set-theoretic notations to define different kind of extensions. Another way to define argumentation semantics is in terms of *labellings*. A common comprehensive handling of labelling-based semantics is introduced in [6], where it is shown that *extensions* and *labellings* are interchangeable. In [6] argumentation semantics are characterized using three-label mapping $\lambda \rightarrow \{IN, OUT, UNDEC\}$. For example let (A, R) be an AF and $S \subset A$ be an admissible set, then the corresponding admissible labelling $\lambda \rightarrow \{IN, OUT, UNDEC\}$ for S is defined by the set

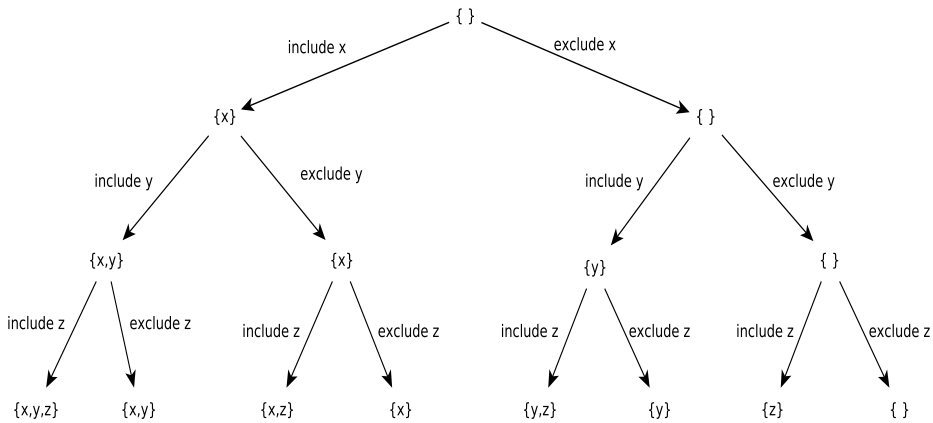

Figure 2: subset enumeration of the set $\{x, y, z\}$.

$$\{(x, IN) \mid x \in S\} \cup \{(x, OUT) \mid x \in S^+\} \cup \{(x, UNDEC) \mid x \in A \setminus (S \cup S^+)\}.$$

In other words the IN label denotes that an argument is in the set $S \subset A$, the OUT label that an argument is attacked by S and the UNDEC label that none of the previous holds.

For the purpose of constructing argument extensions, we use a five-label mapping $Lab : A \to \{IN, OUT, UNDEC, BLANK, MUST_OUT\}$. The extra labels, BLANK & MUST_OUT, are used for algorithmic purposes only. The BLANK label is the initial label for all arguments in a given AF. An argument x is labeled with MUST_OUT if and only if:

1. there is an argument y with $Lab(y) = IN$ such that $x \in \{y\}^-$,
2. and there is no argument z with $Lab(z) = IN$ such that $x \in \{z\}^+$.

The MUST_OUT label denotes an argument that must be labeled OUT to make the set of IN arguments admissible, but does not have yet an attacker labeled IN. Our algorithm is a depth-first-search backtracking procedure (and so all of the algorithms presented in the paper) that passes along an abstract binary tree. The nodes of the tree are different states of a total mapping $Lab : A \to \{IN, OUT, UNDEC, BLANK, MUST_OUT\}$. In what follows we define different kinds of states, from now on we refer to these states by labellings. We start with defining the initial labelling (i.e. the root node of the binary tree.)

Definition 2 (Initial Labelling). *Let $H = (A, R)$ be an* AF *and $S \subseteq A$ be the set of self-attacking arguments. Then the initial labelling of H is defined by the union: $\{(x, BLANK) \mid x \in A \setminus S\} \cup \{(y, UNDEC) \mid y \in S\}$.*

Trying to build a set including (respectively excluding) some argument, the algorithm forks to a left (respectively right) node by what we call *transitions*.

Recall that we build conflict-free sets, and so including an argument in a set will consequently expel the neighbor arguments out of the set. Hence, a *left-transition* involves three actions: labelling some argument with IN, its attackers with MUST_OUT while the arguments it attacks are labeled OUT. A *right-transition* is basically equivalent to labelling some argument with UNDEC. In what follows we precisely define left and right transitions.

Definition 3 (Left-Transition). *Let $H = (A, R)$ be an* AF*, $Lab : A \rightarrow \{IN, OUT, UNDEC, MUST_OUT, BLANK\}$ be a total mapping and x be an argument with $Lab(x) = BLANK$. Then the left-transition of Lab to a new labelling Lab' using x is defined by:*

1. $Lab' \leftarrow Lab$.
2. $Lab'(x) \leftarrow IN$.
3. *for each* $y \in \{x\}^+$, $Lab'(y) \leftarrow OUT$.
4. *for each* $z \in \{x\}^-$ *with* $Lab'(z) \neq OUT$, $Lab'(z) \leftarrow MUST_OUT$.

Definition 4 (Right-Transition). *Let $H = (A, R)$ be an* AF*, $Lab : A \rightarrow \{IN, OUT, UNDEC, MUST_OUT, BLANK\}$ be a total mapping and x be an argument with $Lab(x) = BLANK$. Then the right-transition of Lab to a new labelling Lab' using x is defined by:*

1. $Lab' \leftarrow Lab$.
2. $Lab'(x) \leftarrow UNDEC$.

We specify *terminal* labellings that are associated with leaf nodes of the search tree. Terminal labellings imply that further transitions are not possible simply because there is no argument left with the BLANK label.

Definition 5 (Terminal Labellings). *Let $H = (A, R)$ be an* AF *and $Lab : A \rightarrow \{IN, OUT, UNDEC, MUST_OUT, BLANK\}$ be a total mapping. Then Lab is a terminal labelling of H if and only if for each $x \in A$, $Lab(x) \neq BLANK$.*

Terminal labellings are either dead ends or solutions. Here we define *dead-end* labellings.

Definition 6 (Dead-end Labellings). *Let $H = (A, R)$ be an* AF *and $Lab : A \rightarrow \{IN, OUT, UNDEC, MUST_OUT, BLANK\}$ be a total mapping. Then Lab is a dead-end labelling of H if and only if Lab is a terminal labelling and there is $x \in A$ with $Lab(x) = MUST_OUT$.*

Now we define solution states. A solution state is actually a labelling that corresponds to a preferred extension. We define first *admissible* labellings then *preferred* labellings.

Definition 7 (Admissible Labellings). *Let $H = (A, R)$ be an* AF *and $Lab : A \rightarrow \{IN, OUT, UNDEC, MUST_OUT, BLANK\}$ be a total mapping. Then Lab is an admissible labelling of H if and only if Lab is terminal and there is no x with $Lab(x) = MUST_OUT$.*

Definition 8 (Preferred Labellings). *Let $H = (A, R)$ be an* AF *and $Lab : A \rightarrow \{IN, OUT, UNDEC, MUST_OUT, BLANK\}$ be a total mapping. Then Lab is a preferred labelling of H if and only if Lab is an admissible labelling and $\{x \mid Lab(x) = IN\}$ is maximal (w.r.t. $\subseteq$) among all admissible labellings.*

We give now algorithm 1 that finds all preferred extensions of a given AF when called with the initial labelling. This is to show a high-level view of the basic mechanism of all algorithms presented in the paper. Note that all procedures in this paper are called by reference to the passed parameters, unless otherwise specified.

Algorithm 1: Enumerate_Preferred(H, Lab, E)

input : H is an AF,
$Lab : A \rightarrow \{IN, OUT, UNDEC, MUST_OUT, BLANK\}$,
$E \subseteq 2^A$.
output: $Lab : A \rightarrow \{IN, OUT, UNDEC, MUST_OUT, BLANK\}$,
$E \subseteq 2^A$.

1 **if** *Lab is a dead-end labelling* **then**
2 return;
3 **if** *Lab is a terminal labelling* **then**
4 **if** *Lab is an admissible labelling* **then**
5 **if** $\{x \mid Lab(x) = IN\}$ *is not a subset of any set in* E **then**
6 $E \leftarrow E \cup \{\{x \mid Lab(x) = IN\}\}$;
7 return;
8 select any argument x with $Lab(x) = BLANK$;
9 get a new labelling Lab' by applying the left-transition of Lab using x;
10 call Enumerate_Preferred(H, Lab', E);
11 get a new labelling Lab' by applying the right-transition of Lab using x;
12 call Enumerate_Preferred(H, Lab', E);

The behavior of algorithm 1 is depicted in figure 3.
We illustrate that algorithm 1 is sound and complete.

Proposition 1. *Let $H = (A, R)$ be an* AF*, Lab be the initial labelling of H and $E = \emptyset$. Then after calling algorithm 1 with $Enumerate_Preferred(H, Lab, E)$, E is the set of all preferred extensions of H.*

Proof: Algorithm 1, and so all of the algorithms of the current paper, can be proved by contradiction. Firstly we note that completeness is guaranteed by the fact that the algorithm builds every conflict-free subset of A, which follows directly from definitions 3 & 4. Also note that conflict-free sets are added to the set E if and only if they are admissible and not a subset of any admissible set in E. To show the soundness, assume that algorithm 1 reported incorrectly S preferred. Then, S is not a maximal (w.r.t. $\subseteq$) admissible set. S being not admissible is a contradiction with the actions of line 4 of the algorithm. If S

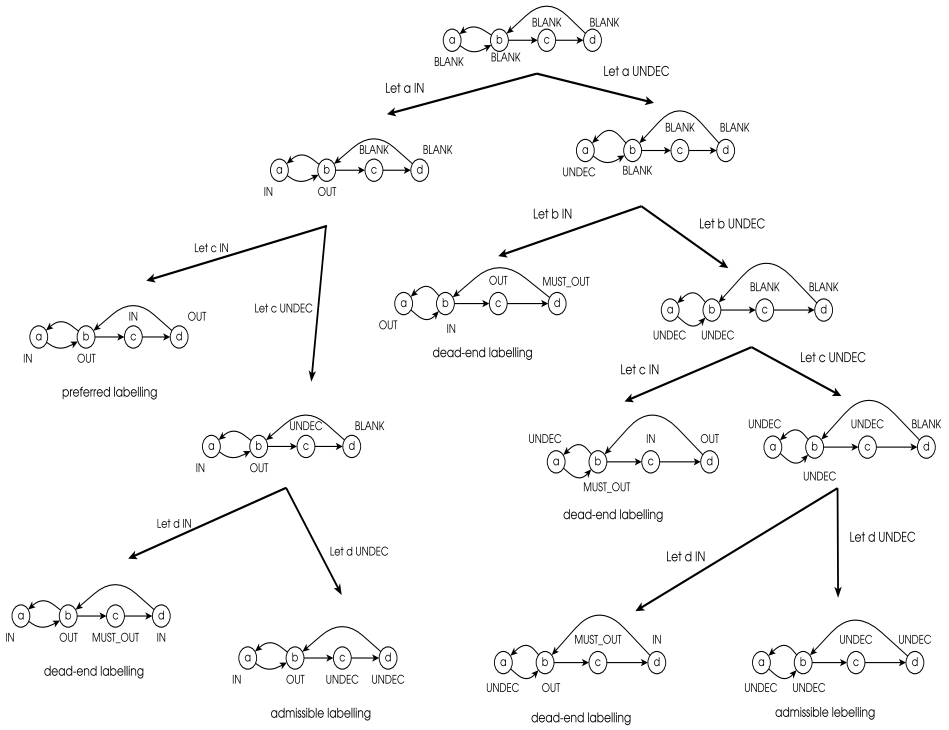

Figure 3: The behavior of algorithm 1 in listing the preferred extensions of a given AF.

is admissible but not maximal then there is a preferred extension $T \in E$ such that $S \subseteq T$. This contradicts with the actions of line 5 together with the fact that maximal subsets are constructed first. ∎

Note that algorithm 1 backtracks if a dead-end labelling is reached or it backtracks to find another preferred extension. To improve the performance of algorithm 1 we note dead-end labellings can be detected earlier before reaching them. Therefore, we define a *hopeless* labelling, expanding of which will lead only to dead-end labellings.

Definition 9 (Hopless Labelling). *Let $H = (A, R)$ be an* AF *and $Lab : A \rightarrow \{IN, OUT, UNDEC, MUST_OUT, BLANK\}$ be a total mapping. Then Lab is a hopeless labelling of H if and only if there is $x \in A$ with $Lab(x) = MUST_OUT$ such that for all $y \in \{x\}^-$ $Lab(y) \in \{OUT, MUST_OUT, UNDEC\}$.*

We give algorithm 2 that backtracks whenever a hopeless labelling is reached. This mechanism, i.e. detecting (and avoiding) fruitless paths before getting to a dead-end labelling, is the spirit of the new *looking-ahead* enhancements.

Algorithm 2: Enumerate_Preferred(H, Lab, E)

input : H is an AF,
$Lab : A \rightarrow \{IN, OUT, UNDEC, MUST_OUT, BLANK\}$,
$E \subseteq 2^A$.
output: $Lab : A \rightarrow \{IN, OUT, UNDEC, MUST_OUT, BLANK\}$,
$E \subseteq 2^A$.

1 **if** *Lab* is a hopeless labelling **then** return;
2 **if** *Lab is a terminal labelling* **then**
3 **if** *Lab is an admissible labelling* **then**
4 **if** $\{x \mid Lab(x) = IN\}$ *is not a subset of any set in* E **then**
5 $E \leftarrow E \cup \{\{x \mid Lab(x) = IN\}\}$;
6 return;
7 select any argument x with $Lab(x) = BLANK$;
8 get a new labelling Lab' by applying the left-transition of Lab using x;
9 call Enumerate_Preferred(H, Lab', E);
10 get a new labelling Lab' by applying the right-transition of Lab using x;
11 call Enumerate_Preferred(H, Lab', E);

We illustrate the soundness and completeness of algorithm 2.

Proposition 2. *Let $H = (A, R)$ be an* AF*, Lab be the initial labelling of H and $E = \emptyset$. Then after calling algorithm 2 with $Enumerate_Preferred(H, Lab, E)$, E is the set of all preferred extensions of H.*

Proof: It follows directly from the similarity between algorithm 2 and algorithm 1. The only difference between algorithm 1 and algorithm 2 is that algorithm 1 backtracks if a dead-end labelling is reached while algorithm 2

instead backtracks if a hopeless labelling is reached. Recall that a dead-end labelling is a terminal labelling in contrary to a hopeless labelling, which is not necessarily terminal. However, if we further expand a hopeless labelling, then by its definition we ended up with a dead-end labelling. Note that a labelling *Lab* being hopeless implies the fact that there is x with $Lab(x) = MUST_OUT$ such that for all $y \in \{x\}^-$ $Lab(y) \in \{OUT, MUST_OUT, UNDEC\}$. Transitioning such *Lab* will not change this situation, which is a basic condition of dead-end labellings. ∎

We add now two changes to algorithm 2 that also improve the efficiency of preferred extension enumeration. The first change is about the argument selection for labelling transition. In all of the presented algorithms we select an argument x with $Lab(x) = BLANK$ such that x has the maximum number of neighbors, we call such x an *influential* argument.

Definition 10 (Influential Arguments). *Let $H = (A, R)$ be an* AF*, $x \in A$ and $Lab : A \rightarrow \{IN, OUT, UNDEC, MUST_OUT, BLANK\}$ be a total mapping. Then x is influential if and only if $Lab(x) = BLANK$ and for all y with $Lab(y) = BLANK$ $|\{x\}^{\pm}| \geq |\{y\}^{\pm}|$.*

For the second change of algorithm 2 we note BLANK arguments that are attacked only by OUT/MUST_OUT arguments must be labeled IN because if the current labelling expanded to an admissible labelling then these arguments will be acceptable with respect to the constructed admissible set. Thus, we *propagate* labellings using *must-in* arguments. A definition of *must-in* arguments is given first then followed by a specification for labelling *propagation*.

Definition 11 (Must-in Arguments). *Let $H = (A, R)$ be an* AF*, $x \in A$ and $Lab : A \rightarrow \{IN, OUT, UNDEC, MUST_OUT, BLANK\}$ be a total mapping. Then x is must-in if and only if $Lab(x) = BLANK$ and for all $y \in \{x\}^-$ $Lab(y) \in \{OUT, MUST_OUT\}$.*

Definition 12 (Labelling Propagation). *Let $H = (A, R)$ be an* AF *and $Lab : A \rightarrow \{IN, OUT, UNDEC, MUST_OUT, BLANK\}$ be a total mapping. Then the propagation of Lab is defined by the following actions:*

1. *if there is no must-in argument, then halt.*
2. *pick a must-in argument x.*
3. *$Lab(x) \leftarrow IN$.*
4. *for each $y \in \{x\}^+$, $Lab(y) \leftarrow OUT$.*
5. *go to 1.*

Now, we present algorithm 3 that includes the two changes, i.e. argument selection and labelling propagation. The changes implemented in lines 8 & 9.

Here we illustrate that algorithm 3 is sound and complete.

Proposition 3. *Let $H = (A, R)$ be an* AF*, Lab be the initial labelling of H and $E = \emptyset$. Then after calling algorithm 3 with $Enumerate_Preferred(H, Lab, E)$, E is the set of all preferred extensions of H.*

Algorithm 3: Enumerate_Preferred(H, Lab, E)

input : H is an AF,
$Lab : A \rightarrow \{IN, OUT, UNDEC, MUST_OUT, BLANK\}$,
$E \subseteq 2^A$.
output: $Lab : A \rightarrow \{IN, OUT, UNDEC, MUST_OUT, BLANK\}$,
$E \subseteq 2^A$.

1 **if** *Lab is a hopeless labelling* **then**
2 return;
3 **if** *Lab is a terminal labelling* **then**
4 **if** *Lab is an admissible labelling* **then**
5 **if** $\{x \mid Lab(x) = IN\}$ *is not a subset of any set in* E **then**
6 $E \leftarrow E \cup \{\{x \mid Lab(x) = IN\}\}$;
7 return;
8 propagate Lab;
9 select any $x \in A$ such that x is influential;
10 get a new labelling Lab' by applying the left-transition of Lab using x;
11 call Enumerate_Preferred(H, Lab', E);
12 get a new labelling Lab' by applying the right-transition of Lab using x;
13 call Enumerate_Preferred(H, Lab', E);

Proof: Algorithm 3 differs from algorithm 2 in two issues: argument selection (line 9) and labelling propagation (line 8). We note that any argument selection strategy is valid and does not affect the soundness/completeness of the algorithm. As to the labelling propagation soundness, assume the algorithm reported incorrectly S admissible due to an argument $x \in S$ that was incorrectly added by labelling propagation. This means x is not acceptable to S, and hence there is $y \in \{x\}^-$ with $Lab(y) = UNDEC$. This is a contradiction, recall labelling propagation is about including arguments that are attacked only by OUT/MUST_OUT arguments. Lastly, observe that by labelling propagation we exclude admissible labellings that are not preferred due to the existence of must-in arguments; hence the algorithm is complete. ∎

We present now algorithm 4, an optimized version of algorithm 3. There are three optimization points. For the first point, we drop the recursive call after a right-transition and put a while structure to do the required loop operation, see lines 3 & 7. For the second optimization point, we increase the number of checks for a hopeless labelling. Now we check for a hopeless labelling every time a labelling changes. Thereby we possibly save a considerable amount of running-time, see lines 2 & 6 & 8. For the third optimization, we start the algorithm by propagating labellings. Consider for example an acyclic input AF, then by applying labeling propagation only we get the preferred extension of the given AF.

We believe the three changes do not raise doubts about the soundness (or

Algorithm 4: Enumerate_Preferred(H, Lab, E)

input : H is an AF,
$Lab : A \rightarrow \{IN, OUT, UNDEC, MUST_OUT, BLANK\}$,
$E \subseteq 2^A$.
output: $Lab : A \rightarrow \{IN, OUT, UNDEC, MUST_OUT, BLANK\}$,
$E \subseteq 2^A$.

1 propagate Lab;
2 **if** Lab is hopeless **then** return;
3 **while** *Lab is not terminal* **do**
4 select any $x \in A$ such that x is influential;
5 get a new labelling Lab' by running the left-transition of Lab using x;
6 **if** Lab' is not hopeless **then** Enumerate_Preferred(H, Lab', E);
7 update Lab by applying the right-transition of Lab using x;
8 **if** Lab is hopeless **then** return;
9 **if** *Lab is admissible* **then**
10 **if** *$\{x \mid Lab(x) = IN\}$ is not a susbet of any set of E* **then**
11 $E \leftarrow E \cup \{\{x \mid Lab(x) = IN\}\}$;

completeness) of our algorithm. Figure 4 depicts the behavior of algorithm 4 in listing the preferred extensions of a given AF. We do not mean by this example to show the improvements brought by algorithm 4. In fact, the algorithm of [19] will behave on this example similarly to algorithm 4.

Now we show the improvement of algorithm 4 over the algorithm of [19]. To do so, we recall the hopeless labelling characterization of [19].

Definition 13 (Hopeless Labellings of [19]). *Let $H = (A, R)$ be an AF, $x \in A$ and $Lab : A \rightarrow \{IN, OUT, UNDEC, MUST_OUT, BLANK\}$ be a total mapping such that $Lab(x) = IN$. Then Lab is a hopeless labelling of H due to x if and only if there is $y \in \{x\}^-$ with $Lab(y) = MUST_OUT$ such that for all $z \in \{y\}^-$ $Lab(z) \in \{OUT, MUST_OUT, UNDEC\}$.*

Now we are ready to give the two differences between algorithm 4 and the algorithm of [19]:

Diff 1. The algorithm of [19] identifies hopeless labellings by checking the attackers of some argument (that is why we call it a *local* looking-ahead), whereas algorithm 4 captures hopeless labellings by investigating every argument with the label MUST_OUT in the framework (that is why we call it a *global* looking-ahead).

Diff 2. The algorithm of [19] checks for hopeless labellings less often, only after left-transitions. In contrast, algorithm 4 checks for hopeless labellings on three occasions, see lines 2, 6 & 8.

We present an example to show the impact of the new enhancement. Referring to figure 5, at this state of the given AF algorithm 4 stops searching and

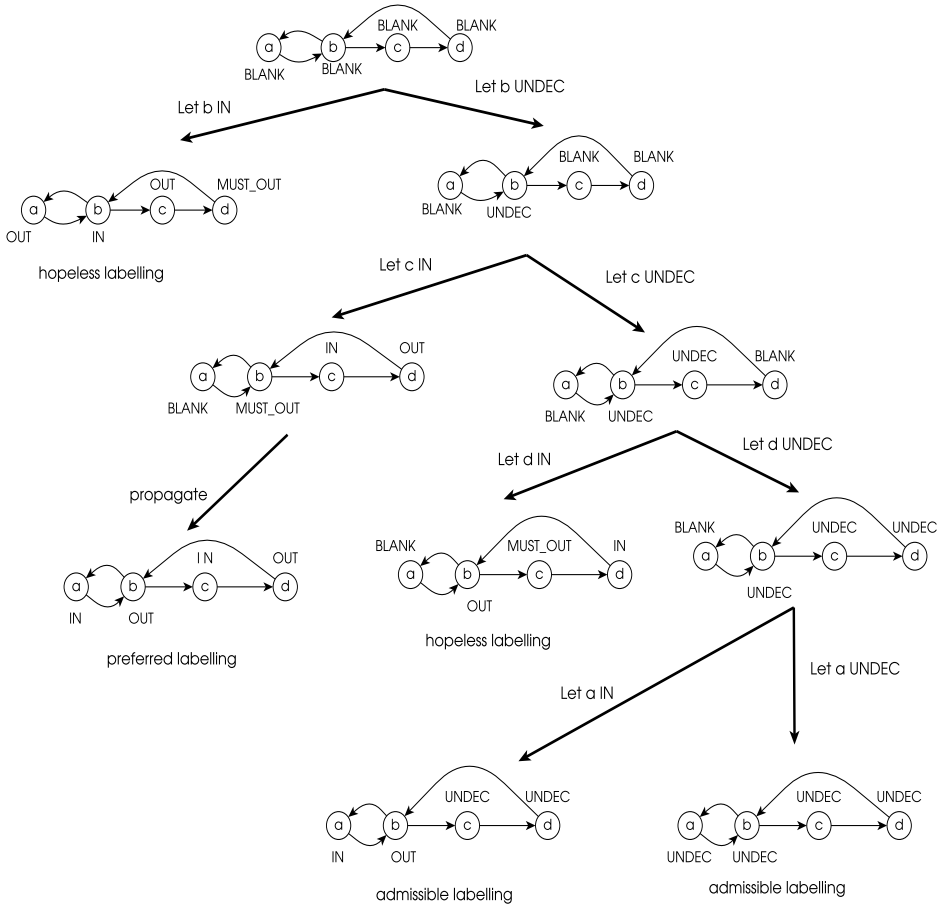

Figure 4: The behavior of algorithm 4 in listing the preferred extensions of a given AF.

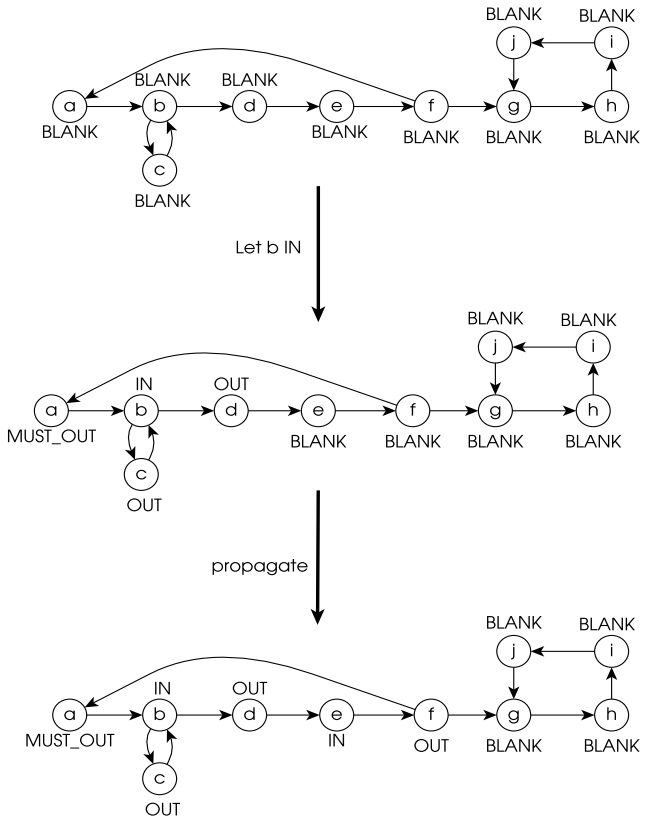

Figure 5: An example to show the enhancement of algorithm 4 over the state-of-the-art algorithm presented in [19].

backtracks because the argument a, which is labelled MUST_OUT, is attacked only by the argument f that is OUT. On the contrary, the algorithm of [19] will continue searching by testing the argument g with the label IN, which is unproductive. However, we verify experimentally the significance of the enhancement in section 5.

3.2. Admissible Sets

For listing admissible sets we present algorithm 5, which is a modification of algorithm 4. There are two differences between algorithm 4 and algorithm 5:

Diff 1. Labelling propagation is not applicable for enumerating admissible sets.

Diff 2. By definition, maximality check is not needed for building admissible sets.

To justify Diff 1, consider an AF $H = (\{a, b, c\}, \{(a, b), (b, c)\})$ with $Lab = \{(a, IN), (b, OUT), (c, BLANK)\}$. Then, using the argument c algorithm 5

performs a left-transition and then a right-transition to report respectively $\{a, c\}$ and $\{a\}$ admissible. In contrast, algorithm 4 will propagate *Lab* to $\{(a, IN), (b, OUT), (c, IN)\}$, thereby building the preferred extension $\{a, c\}$. Note that with labelling propagation the admissible set $\{a\}$ is overlooked.

Algorithm 5: Enumerate_Admissible(H, Lab, E)

input : H is an AF,
$Lab : A \rightarrow \{IN, OUT, UNDEC, MUST_OUT, BLANK\}$,
$E \subseteq 2^A$.
output: $Lab : A \rightarrow \{IN, OUT, UNDEC, MUST_OUT, BLANK\}$,
$E \subseteq 2^A$.

```
while Lab is not terminal do
    select any x ∈ A such that x is influential;
    get a new labelling Lab' by running the left-transition of Lab using x;
    if Lab' is not hopeless then Enumerate_Admissible(H, Lab', E);
    update Lab by applying the right-transition of Lab using x;
    if Lab is hopeless then return;
if Lab is admissible then
    E ← E ∪ {{x | Lab(x) = IN}};
```

3.3. Complete Semantics

To present our algorithm for complete extension enumeration, we define first complete labellings.

Definition 14 (Complete Labellings). *Let $H = (A, R)$ be an* AF *and $Lab : A \rightarrow \{IN, OUT, UNDEC, MUST_OUT, BLANK\}$ be a total mapping. Then Lab is a complete labelling of H if and only if Lab is admissible and for each x with $Lab(x) = UNDEC$ there is $y \in \{x\}^-$ with $Lab(y) = UNDEC$.*

Thus, complete labellings go hand in hand with labelling propagation. This is because a complete labelling can not be reached if a procedure applies a right-transition using a must-in argument, which is a BLANK argument that is attacked only by OUT/MUST_OUT arguments. Next we prove that a complete labelling corresponds to a complete extension, i.e. the set of IN arguments of a given complete labelling is a complete extension.

Proposition 4. *Let $H = (A, R)$ be an* AF *and Lab be a complete labelling of H. Then, the set $S = \{x \mid Lab(x) = IN\}$ is a complete extension of H.*

Proof: Assume S is admissible but not complete. Then there is $x \notin S$ with $Lab(x) = UNDEC$ such that x is acceptable to S. This is in contradiction to the definition of complete labellings. Similarly, S being not admissible is a contradiction. ∎

We give algorithm 6 that lists complete extensions.

Consider an AF $H = (\{a, b, c\}, \{(a, b), (b, a), (b, c), (c, b)\})$ with $Lab = \{(a, UNDEC), (b, OUT), (c, IN)\}$. Then, $\{c\}$ is admissible but not complete because a, which is with $Lab(a) = UNDEC$, is acceptable w.r.t. $\{c\}$. Therefore, algorithm 6 differs from algorithm 4 in two aspects:

1. Maximality check is not required for listing complete extensions, contrary to preferred extensions.
2. By the definition of complete labellings, the property that every UNDEC argument being attacked by an UNDEC argument is essential in identifying complete extensions, see line 9 of algorithm 6.

Algorithm 6: Enumerate_Complete(H, Lab, E)

input : H is an AF,
$Lab : A \to \{IN, OUT, UNDEC, MUST_OUT, BLANK\}$,
$E \subseteq 2^A$.
output: $Lab : A \to \{IN, OUT, UNDEC, MUST_OUT, BLANK\}$,
$E \subseteq 2^A$.

1 propagate Lab;
2 **if** Lab is hopeless **then** return;
3 **while** *Lab is not terminal* **do**
4 select any $x \in A$ such that x is influential;
5 get a new labelling Lab' by running the left-transition of Lab using x;
6 **if** Lab' is not hopeless **then** Enumerate_Complete(H, Lab', E);
7 update Lab by applying the right-transition of Lab using x;
8 **if** Lab is hopeless **then** return;
9 **if** *Lab is a complete labelling* **then**
10 $E \leftarrow E \cup \{\{x \mid Lab(x) = IN\}\}$;

3.4. Stable Semantics

Recall that if S is a stable extension of an AF $H = (A, R)$ then $S^+ = A \setminus S$. Therefore the UNDEC label is not usable in characterizing stable semantics, and so stable extensions can be constructed by using a 4-label mapping $Lab : A \to \{IN, OUT, MUST_OUT, BLANK\}$. Although left-transitions are valid for listing stable extensions, we note right-transitions are not applicable any more due to the absence of the UNDEC label. In the following definition we describe right-transitions for listing stable extensions.

Definition 15 (Right-Transition-Stable). *Let $H = (A, R)$ be an AF, $Lab : A \to \{IN, OUT, MUST_OUT, BLANK\}$ be a total mapping and x be an argument with $Lab(x) = BLANK$. Then the right-transition-stable of Lab to a new labelling Lab' using x is defined by:*

1. $Lab' \leftarrow Lab$.
2. $Lab'(x) \leftarrow MUST_OUT$.

We emphasize that for listing stable extensions we use a 4-label mapping instead of a 5-label mapping in specifying the initial labelling, left transitions, terminal labellings, dead-end labellings, hopeless labellings, must-in arguments, labelling propagation, and influential arguments. These concepts are analogous to the ones under preferred semantics but again with dropping the UNDEC label. Now we describe stable labellings.

Definition 16 (Stable Labellings). *Let $H = (A, R)$ be an* AF *and $Lab : A \rightarrow \{IN, OUT, BLANK, MUST_OUT\}$ be a total mapping. Then Lab is a stable labelling of H if and only if Lab is terminal and there is no x with $Lab(x) = MUST_OUT$.*

Observe that stable labellings capture stable extensions. Let $H = (A, R)$ be an AF and Lab be a stable labelling of H. Then it follows directly, from the definition of stable labellings and right-transition-stable, that the set $S = \{x \mid Lab(x) = IN\}$ is a stable extension of H.

For listing stable extensions, we present algorithm 7.

Algorithm 7: Enumerate_Stable(H, Lab, E)

input : H is an AF,
$Lab : A \rightarrow \{IN, OUT, MUST_OUT, BLANK\}$,
$E \subseteq 2^A$.
output: $Lab : A \rightarrow \{IN, OUT, MUST_OUT, BLANK\}$,
$E \subseteq 2^A$.

```
propagate Lab;
if Lab is hopeless then return;
while Lab is not terminal do
    select any x ∈ A such that x is influential;
    get a new Lab' by running the left-transition of Lab using x;
    if Lab' is not hopeless then Enumerate_Stable(H, Lab', E);
    update Lab by applying the right-transition-stable of Lab using x;
    if Lab is hopeless then return;
if Lab is a stable labelling then
    E ← E ∪ {{x | Lab(x) = IN}};
```

To summarize, algorithm 7 is different from algorithm 4 in three issues:

1. By definition, maximality check is not required for listing stable extensions.
2. Algorithm 7 uses a four-label mapping
$$Lab : A \rightarrow \{IN, OUT, MUST_OUT, BLANK\},$$
whereas algortihm 4 applies a five-label mapping
$$Lab : A \rightarrow \{IN, OUT, MUST_OUT, UNDEC, BLANK\}.$$
3. The right-transitions for stable extension enumeration is modified as specified in definition 15.

3.5. Semi Stable Semantics

For listing semi stable extensions we present algorithm 8. It is known that a subset S is semi stable if it is preferred and $S \cup S^+$ is maximal among all preferred extensions (see [2]). Thus, algorithm 8 performs additional steps (on top of what algorithm 4 does) to find semi stable extensions from the constructed set of all preferred extensions, see lines 1 - 3 of algorithm 8. Consider an AF $H = (\{a, b, c\}, \{(a, b), (b, a), (b, c), (c, c)\})$ then there are two preferred extensions $\{a\}$ & $\{b\}$ while there is only one semi stable extension, which is $\{b\}$.

Algorithm 8: Enumerate_Semi_Stable(H, E_{prf}, E)

input : H is an AF,
E_{prf} is the set of the preferred extensions of H,
$E \subseteq 2^A$.
output: $E \subseteq 2^A$.
1 **foreach** $S \in E_{prf}$ **do**
2 **if** $\nexists T \in E_{prf}$ *with* $S \cup S^+ \subsetneq T \cup T^+$ **then**
3 $E \leftarrow E \cup \{S\}$;

3.6. Ideal Semantics

Now we present algorithm 9 for constructing the ideal extension. Note that the ideal extension is the maximal complete extension that is not attacked by any other complete extension, see [2]. Therefore, algorithm 9 builds the ideal extension by firstly constructing all complete extensions. Then it picks the ideal extension from the listed complete extensions, see lines 1- 4. Observe that all algorithms in this paper are designed to enumerate extensions in descending order (w.r.t. $\subseteq$) from a maximal extension to a minimal one; hence at line 1 there is no extra work to be done to traverse complete extensions in this order.

Algorithm 9: Build_The_Ideal_Extension(H, E_{com})

input : H is an AF,
E_{com} is the set of the complete extensions of H.
1 **foreach** $S \in E_{com}$ **do** `// descendingly w.r.t. set inclusion`
2 **if** $\forall T \in E_{com}$ $T^+ \cap S = \emptyset$ **then**
3 report S is the ideal extension;
4 halt;

4. Enhanced backtracking algorithms for the acceptance problem

We present algorithms for deciding credulous and skeptical acceptance problem under preferred and stable semantics.

4.1. Credulous acceptance under preferred, complete and admissible semantics

It is known that an argument is credulously accepted under preferred, admissible and complete semantics if and only if the argument is in an admissible set. Since we are concerned with deciding an acceptance of some argument, say x, then the first step is to label x with IN and next to apply the effect on the neighbor arguments. We define the initial labelling for deciding credulous acceptance.

Definition 17 (Initial Labelling for Deciding Acceptance). *Let $H = (A, R)$ be an* AF*, x be an argument, $S \subseteq A$ be the set of self-attacking arguments such that $x \notin S$. Then, the initial labelling of H for deciding an acceptance of x is defined by the union of the sets:*
$\{(x, IN)\} \cup$
$\{(y, OUT) \mid y \in \{x\}^+\} \cup$
$\{(z, MUST_OUT) \mid z \in \{x\}^-\} \cup$
$\{(v, BLANK) \mid v \notin S \cup \{x\}^\pm \cup \{x\}\} \cup$
$\{(u, UNDEC) \mid u \in S \setminus \{x\}^\pm\}$.

We note a terminal labeling, as defined earlier, is no more applicable to deciding credulous acceptance. This is because a credulous acceptance of some argument is affected by *some* (i.e. not all) of the BLANK arguments, which are those that have a directed path to the argument in question. For example in figure 6 the argument g has no effect on the credulous acceptance status of the argument e. We give below a new definition for terminal labellings.

Definition 18 (Terminal Labellings for Deciding Acceptance). *Let $H = (A, R)$ be an* AF*, x be an argument and $Lab : A \to \{IN, OUT, UNDEC, MUST_OUT, BLANK\}$ be a total mapping. Then Lab is a terminal labelling of H for deciding an acceptance of x if and only if there is no $(y, z) \in R$ with $Lab(y) = BLANK$ and $Lab(z) = MUST_OUT$.*

Another issue with deciding credulous acceptance is the concept of influential arguments. Earlier we call an argument influential if it is labelled BLANK and has the maximum number of neighbors among all BLANK arguments. Again, deciding acceptance (for a given argument) is only affected by the arguments that have a directed path to the argument in question. So, we are interested in the influential arguments that have a directed path to the argument in question. We modify the definition of influential arguments for deciding credulous acceptance.

Definition 19 (Influential Arguments for Deciding Acceptance). *Let $H = (A, R)$ be an* AF*, x be an argument, $Lab : A \to \{IN, OUT, UNDEC, MUST_OUT, BLANK\}$ be a total mapping, $Q = \{u$ with $Lab(u) = BLANK \mid$ there is $v \in \{u\}^+$ with $Lab(v) = MUST_OUT\}$ and $y \in Q$. Then, y is influential in deciding a credulous acceptance of x if and only if for all $z \in Q$ $|\{y\}^\pm| \geq |\{z\}^\pm|$.*

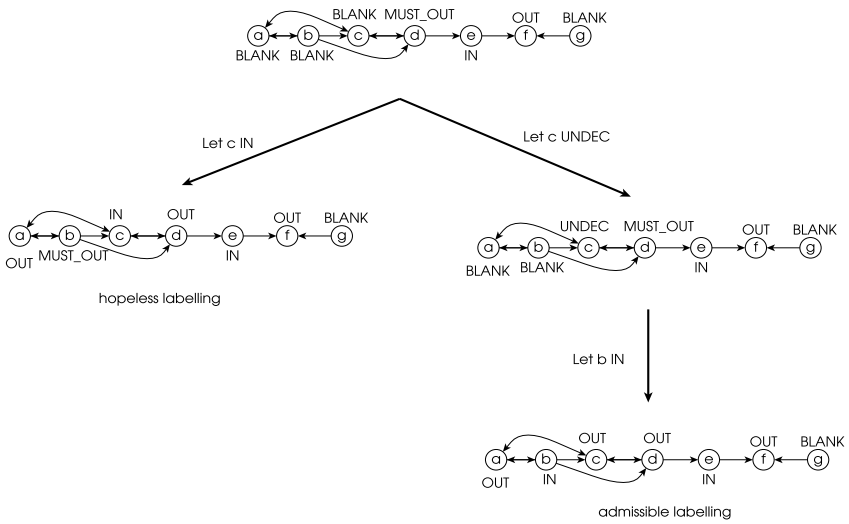

Figure 6: How algorithm 10 decides a credulous acceptance of e in a given AF.

We present algorithm 10 for deciding credulous acceptance, see figure 6 that shows how algorithm 10 works.

We summarize now the differences between algorithm 10 and algorithm 4:

1. Maximality check is not required for deciding credulous acceptance, recall algorithm 10 basically builds an admissible set containing the argument in question.
2. The initial labelling is different, see definition 17.
3. Terminal labellings are different, see definition 18.
4. Influential arguments are different, see definition 19.

It is not hard to see the soundness and completeness of algorithm 10.

Proposition 5. *Let $H = (A, R)$ be an* AF*, x be an argument and Lab is the initial labelling of H for deciding a credulous acceptance of x. Then algorithm 10, by calling Decide_Credulous(H,x,Lab), decides a credulous acceptance of x.*

Proof: Directly from similar structure of algorithm 10 and algorithm 4. ∎

Now we compare algorithm 10 with the algorithm of [19] for deciding credulous acceptance; there are three differences:

1. The first difference is stylistic only. In [19] the algorithm uses the labeling

$$Lab : A \rightarrow \{PRO, OPP, OUT, MUST_OUT, UNDEC, BLANK\}$$

while algorithm 10 uses

$$Lab : A \rightarrow \{IN, OUT, MUST_OUT, UNDEC, BLANK\}.$$

Algorithm 10: Decide_Preferred_Credulous(H, x, Lab)

input : H is an AF,
x is the argument in question,
$Lab : A \rightarrow \{IN, OUT, UNDEC, BLANK, MUST_OUT\}$.
output: $Lab : A \rightarrow \{IN, OUT, UNDEC, BLANK, MUST_OUT\}$.

```
propagate Lab;
if Lab is hopeless then x is not accepted, halt;
while Lab is not terminal do
    select any x ∈ A such that x is influential;
    get a new labelling Lab' by running the left-transition of Lab using x;
    if Lab' is not hopeless then Decide_Credulous(H, x, Lab');
    update Lab by applying the right-transition of Lab using x;
    if Lab is hopeless then return;
if Lab is admissible then
    report x is accepted, x is in the admissible set {y | Lab(y) = IN};
    halt;
```

The PRO label is applied in the same way the IN label is used in algorithm 10. The actual difference between the two mappings is the use of the OPP label. For a built admissible set S, an argument x with $Lab(x) = OPP$ implies that $x \in S^+ \cap S^-$ whereas in algorithm 10 such x is mapped to OUT. Note that in [19] the concern was to compare with related work that uses PRO & OPP. In this paper we opt to keep labeling mappings consistent in all algorithms for readability. Again, we stress that this issue (i.e. which of the two mappings to use) is a choice matter that has negligible effect on running-time efficiency.

2. Algorithm 10 applies labelling propagation. This is not the case in the algorithm of [19].
3. Lastly we note that algorithm 10 is enhanced in the same way algorithm 4 is improved over the algorithm of [19] for preferred extension enumeration, see subsection 3.1.

4.2. Deciding skeptical acceptance under preferred semantics

We present algorithm 11 for deciding skeptical acceptance. The algorithm tries to build *all* preferred extensions that include the argument in question; if no preferred extension is found then the argument is not skeptically accepted. Otherwise, the algorithm tries to build *one* preferred extension without the concerned argument. If such extension is not found then the algorithm concludes that the argument is accepted. If the algorithm finds *one* preferred extension not containing the argument, then it concludes that the argument is not accepted. In fact algorithm 11 uses algorithm 4 for enumerating extensions. We note algorithm 4 can be easily modified to list *one* extension instead of *all* extensions.

We stress that for deciding skeptical acceptance we build all preferred extensions that include the argument in question. This is because if an admissible

set S for a given AF is constructed excluding the argument in question, say x, but not attacking x, then it is important to verify that S can not be expanded to an admissible set that includes x. Such verification is straightforward if all preferred extensions including x are already constructed.

Algorithm 11: Decide_Preferred_Skeptical(H, x)

input : H is an AF,
x is the argument in question.

1 Let *Lab* be the the initial labeling of H for deciding a skeptical acceptance of x; `// As specified in definition 17`
2 Let E be an empty set;
3 call *Enumerate_Preferred*(H, Lab, E) of algorithm 4;`// To find all extensions including` x
4 if E is empty then report x not accepted and then halt;
5 reset *Lab* to be the initial labelling of H as described in definition 2;
6 set $Lab(x)$ to UNDEC;
7 call *Enumerate_Preferred*(H, Lab, E) of algorithm 4;`// To find one extension excluding` x
8 if there is $S \in E$ such that $x \notin S$ then x is not accepted else x is accepted;

We recall the algorithm of [19] for deciding skeptical acceptance to compare with algorithm 11. The algorithm of [19] decides that an argument is not skeptically accepted if it is attacked by a credulous argument. Otherwise the algorithm of [19] enumerates all extensions. If an extension, without the argument in question, is constructed then the algorithm stops searching to conclude that the argument is not accepted; else, the argument is accepted. Apart from the new looking-ahead strategy, algorithm 11 is just another style of deciding the skeptical preferred acceptance, which – we believe – is more elegant.

4.3. Deciding credulous acceptance under stable semantics

For credulous acceptance under stable semantics, we present (for the first time w.r.t. the current backtracking algorithms) algorithm 12 that decides credulous acceptance without listing all stable extensions. The algorithm tries to construct *one* stable extension including the argument in question. If such extension is found then the algorithm concludes that the argument is accepted. Otherwise the algorithm decides that the argument is not accepted. In fact, if the problem is to decide credulous acceptance for all arguments in a given AF then listing all stable extensions is more efficient than using algorithm 12. Algorithm 12 uses algorithm 7 for enumerating extensions. We note algorithm 7 can be easily modified to list *one* extension instead of *all* extensions.

4.4. Deciding skeptical acceptance under stable semantics

For skeptical acceptance under stable semantics, we present (for the first time w.r.t. the current backtracking algorithms) algorithm 13 that decides skeptical

Algorithm 12: Decide_Stable_Credulous(H, x)

input : H is an AF,
x is the argument in question.

1 Let E be an empty set;
2 Let *Lab* be the the initial labeling of H for deciding a credulous acceptance of x; `// As specified in definition 17`
3 call *Enumerate_Stable(H, Lab, E)* of algorithm 7;`// To find one extension including` x
4 if E is empty then x is not accepted else x is accepted;

acceptance *without* listing all stable extensions. The algorithm tries to construct *one* stable extension excluding the argument in question. If such extension is found then the algorithm concludes that the argument is not skeptically accepted; else, the argument is skeptically accepted. Algorithm 13 uses algorithm 7 for enumerating extensions. Again we note algorithm 7 can be easily modified to list *one* extension instead of *all* extensions.

Algorithm 13: Decide_Stable_Skeptical(H, x)

input : H is an AF,
x is the argument in question.

1 Let E be an empty set;
2 Let *Lab* be the the initial labeling of H as specified in definition 2;
3 set *Lab*(x) to UNDEC;
4 call *Enumerate_Stable(H, Lab, E)* of algorithm 7;`// To find one extension excluding` x
5 if E is empty then x is accepted else x is not accepted;

4.5. Deciding acceptance under other semantics

For deciding a skeptical acceptance of an argument, say x, in a given AF under complete semantics we note that x is accepted if and only if x is in the grounded extension, see [2]. So having the grounded extension constructed (using, for example, the algorithm presented in [18]) is enough for deciding the skeptical acceptance problem under complete semantics.

Under admissible semantics the skeptical acceptance problem is trivially decided such that every argument is not skeptically accepted since the empty set is admissible. Under semi stable semantics we do not give dedicated algorithms for deciding the acceptance problem, but obviously algorithm 8 can be used for deciding skeptical and credulous acceptance.

Under ideal semantics an acceptance of some argument, say x in a given AF, can be decided by using algorithm 6 for listing all complete extensions, which will be used later to build the ideal extension. During the listing process if a complete extension is found attacking x, then x is reported not accepted and

then the process terminates. Otherwise, an acceptance of x is decided from the constructed ideal extension.

5. Experimental Study

We performed our experiments on a Linux-based machine (Red Hat Enterprise Linux 7) with Intel Core i7-4702MQ 2.2GHz processor along with 4 GB of system memory. In our experiments we reported elapsed running times (in seconds) using the `time` command of Linux. For the lack of non-trivial set of real instances of AFs, we generated *random* AFs by setting attacks (i.e. elements of R) randomly with some predefined probability. All of the generated AFs were free from self-attacking arguments; our algorithms can easily handle AFs with self-attacking arguments, but we avoided generating them in our experiments to make sure that we do not end up with trivial AFs. In acceptance problem instances, we decide acceptance for an arbitrary argument; however, for a given AF instance we pick the same argument in every trial. For any problem instance we set a time limit of 120 seconds; note that we include timeouts in reporting total running times. The main goal of the experiments is to verify that the new implementation of the algorithms presented above is more efficient than previous implementations, which means that the new global looking-ahead strategy is effective. We implemented four experiments:

EXP 1. We examined how our algorithms perform as $|R|$ changes. Figure 7 illustrates the behavior of algorithm 4 running on a set of 1000 AFs. These AFs were generated randomly with $|A| = 120$ in each instance. Every point of the chart of figure 7 represents the average running time of solving 10 AFs. For every $p \in \{0.01, 0.02, 0.03, ..., 0.98, 0.99, 1.0\}$, we generated 10 random AFs using p as the probability of any (x, y) being in R for a given AF. More specifically, given a set of arguments $A = \{a_0, a_1, ..., a_{118}, a_{119}\}$ then the probability that $a_i \in A$ attacks $a_j \in A$ is equal to p. Back to figure 7, we observed two facts:

(a) hard (random) AFs for algorithm 4 (and analogously for all of the algorithms of this paper) might be often among those instances with (approximately) $2|A| < |R| < 20|A|$. Nonetheless, we stress that not every AF (with $2|A| < |R| < 20|A|$) is necessarily hard to our algorithm.

(b) the running-time of the algorithms is more sensitive to $|R|$ rather than $|A|$, which is also observed in [8, 10].

EXP 2. We compared the running-time of the new algorithm with the previous algorithm together with two reduction-based solvers: CoQuiAAS and ArgSemSAT, which achieved first (respectively second) place in the First International Competition on Computational Models of Argument (ICCMA 2015), see [22, 23]. CoQuiAAS is based on constraint programming solvers, while ArgSemSAT is based on satisfiability solvers. In this experiment we generated 1000 AFs with $|A| = 120$. For every $p \in \{0.01, 0.02, 0.03, ..., 0.98, 0.99, 1.0\}$, we generated 10 random AFs using p

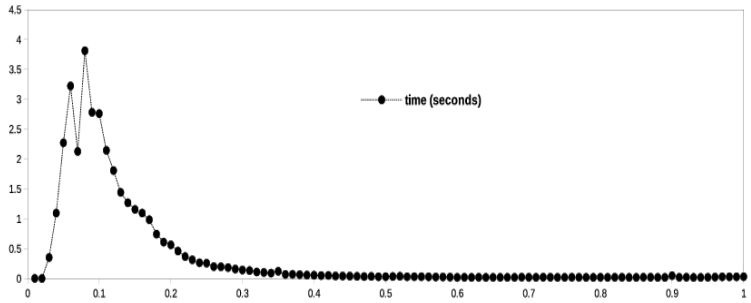

Figure 7: The behavior of algorithm 4 where the x-axis represents the probability used in generating the corresponding solved AFs.

Table 1: The results of EXP 2 that verify the new looking-ahead strategy.

problem	new algorithms		previous algorithms		CoQuiAAS		ArgSemSAT	
	seconds	timeouts	seconds	timeouts	seconds	timeouts	seconds	timeouts
$P1_{preferred}$	241.83	0	11813.50	68	66.80	0	1356.17	0
$P1_{stable}$	90.35	0	1239.33	0	30.27	0	2302.99	0
$P1_{complete}$	227.32	0	11715.29	69	48.26	0	1449.92	0
$P1_{admissible}$	2553.70	7	-	-	-	-	-	-
$P1_{semi\ stable}$	247.68	0	11764.22	70	-	-	-	-
$P1_{ideal}$	244.70	0	11798.88	70	-	-	-	-
$P3_{preferred}$	26.06	0	51.97	0	7.21	0	78.47	0
$P4_{preferred}$	69.81	0	3097.94	21	36.94	0	109.69	0
$P3_{stable}$	21.54	0	-	-	2.06	0	92.51	0
$P4_{stable}$	50.80	0	-	-	6.63	0	118.57	0

as the probability of any (x, y) being in R for a given AF. We report the total running-time of solving the 1000 AFs in table 1. We use (-) in the tables to imply that a problem is not solvable by the respective solver. In summary, the table verifies that the new algorithms are more efficient than previous algorithms. In this experiment we note that the total running-times of ArgSemSAT are larger than the new algorithms. However it does not contradict the results of ICCMA 2015. This is because most of the AFs of the competition seem to be generated with $2|A| < |R| < 20|A|$, which are hard to our algorithms as we noted earlier.

EXP 3. Comparing with CoQuiAAS and ArgSemSAT, we evaluated the performance of the new algorithms using a different set of random AFs. We generated 1000 random AFs with $|A|$=120 as illustrated next. Given a set of arguments $A = \{a_0, a_1, a_3, ..., a_{118}, a_{119}\}$, then the probability that $a_i \in A$ attacks $a_j \in A$ is equal to $0.01 + 0.01 * (i \textbf{ div } 2)$. Thereby the number of outgoing attacks varies from argument to argument in a given AF. This is in contrary to the generated AFs for the other experiments where in a given AF the number of outgoing attacks is almost constant for all arguments. We report the total running-times of solving the 1000 AFs in table 2. The results show that the evaluated AFs are easier to the new algorithm than the set used in EXP 2. This confirms that hard random

Table 2: The results of EXP 3, using a different set of random AFs.

problem	new algorithms		CoQuiAAS		ArgSemSAT	
	seconds	timeouts	seconds	timeouts	seconds	timeouts
$P1_{preferred}$	20.10	0	20.98	0	199.81	0
$P1_{stable}$	17.32	0	16.93	0	172.38	0
$P1_{complete}$	27.91	0	13.11	0	233.55	0
$P1_{admissible}$	28.29	0	-	-	-	-
$P1_{semi\ stable}$	28.12	0	-	-	-	-
$P1_{ideal}$	20.00	0	-	-	-	-
$P3_{preferred}$	10.00	0	0.89	0	30.88	0
$P4_{preferred}$	10.09	0	6.02	0	40.19	0
$P3_{stable}$	10.41	0	7.05	0	30.83	0
$P4_{stable}$	14.96	0	12.50	0	39.62	0

Table 3: The results of EXP 4, using random AFs with $|A|$=200.

problem	new algorithms		CoQuiAAS		ArgSemSAT	
	seconds	timeouts	seconds	timeouts	seconds	timeouts
$P1_{preferred}$	1917.12	12	765.81	1	1533.24	1
$P1_{stable}$	1353.48	6	180.89	0	1745.36	2
$P1_{complete}$	1906.85	12	316.69	0	1733.77	1
$P1_{admissible}$	2017.41	14	-	-	-	-
$P1_{semistable}$	1904.54	12	-	-	-	-
$P1_{ideal}$	1901.50	12	-	-	-	-
$P3_{preferred}$	85.16	0	11.40	0	53.70	0
$P4_{preferred}$	1072.22	6	397.88	1	109.06	0
$P3_{stable}$	132.67	0	5.24	0	53.19	0
$P4_{stable}$	289.89	1	44.38	0	124.87	0

AFs are often among those with $2|A| < |R| < 20|A|$. Note that in this experiment the average probability used in generating the AFs is about 0.3, which means on average $|R| > 30|A|$.

EXP 4. In contrast to CoQuiAAS and ArgSemSAT, we evaluated how the new algorithms perform as $|A|$ increases. Therefore, we generated 100 random AFs with $|A|$=200. For every $p \in \{0.01, 0.02, 0.03, ..., 0.98, 0.99, 1.0\}$, we generated an AF using p as the probability of any (x, y) being in R. In table 3 we report the total running-times of solving the 100 AFs. As we expected, the total times of our algorithms go up as the number of arguments grows.

6. Conclusion

We have presented refined backtracking algorithms for computational problems under a number of argumentation semantics: preferred, admissible, com-

plete, stable, semi stable and ideal semantics. Specifically, we improved the backtracking search for extensions by using a global looking-ahead strategy rather than the local looking-ahead strategy used in existing backtracking algorithms [19]. Also, we set a new implementation of a backtracking approach to deciding the acceptance problem –without *necessarily* listing all extensions– under preferred, complete, admissible and stable semantics. All presented algorithms are implemented and the improvements are experimentally verified.

The paper was focused on improving backtracking-based implementations for abstract argumentation frameworks. This line of research, i.e. backtracking algorithms for AFs, was considered by a number of works such as [10, 11, 7, 25, 4, 21]. However, we build on the state-of-art backtracking-based implementations presented in [19, 18]. There are, of course, different kinds of implementation such as reduction-based algorithms; see [9] for an excellent review of methods for implementing computational problems in abstract argumentation. Additionally the results of ICCMA 2015 [22] show the performance of some of the above algorithms compared with reduction-based methods; our entry in the competition was under the name "ArgTools". Although the presented backtracking-based implementations might not be as efficient as some reduction-based solvers, we believe it is a matter of time until more intelligent backtracking techniques will be implemented for abstract argumentation. In this regard, we plan to investigate implementing backtracking procedures that learn from failures (i.e. dead-ends). Such learning process is an important factor in the efficient backend solvers of the successful reduction-based entries of ICCMA 2015, see for example [1, 15]. Also in future work we will study different dynamic orderings for the argument selection. Recall the presented algorithms apply a static ordering, which depends on the number of neighbor arguments.

Acknowledgements

The authors thank the anonymous reviewers for the helpful comments that led to an improved presentation. We also thank Stefan Woltran (from Vienna University of Technology) for the useful discussion via email on issues related to implementing abstract argumentation. The research of the first author, Samer Nofal, is supported by the Scientific Research Deanship at German Jordanian University (project number SIC 18/2015.)

References

[1] Gilles Audemard and Laurent Simon. Predicting learnt clauses quality in modern SAT solvers. In *IJCAI 2009, Proceedings of the 21st International Joint Conference on Artificial Intelligence, Pasadena, California, USA, July 11-17, 2009*, pages 399–404, 2009.

[2] Pietro Baroni, Martin Caminada, and Massimiliano Giacomin. An introduction to argumentation semantics. *Knowledge Eng. Review*, 26(4):365–410, 2011.

[3] Trevor J. M. Bench-Capon, Katie Atkinson, and Adam Zachary Wyner. Using argumentation to structure e-participation in policy making. *T. Large-Scale Data- and Knowledge-Centered Systems*, 18:1–29, 2015.

[4] Martin Caminada. An algorithm for computing semi-stable semantics. In *Symbolic and Quantitative Approaches to Reasoning with Uncertainty, 9th European Conference, ECSQARU 2007, Hammamet, Tunisia, October 31 - November 2, 2007, Proceedings*, pages 222–234, 2007.

[5] Martin Caminada, Walter Alexandre Carnielli, and Paul E. Dunne. Semi-stable semantics. *J. Log. Comput.*, 22(5):1207–1254, 2012.

[6] Martin W. A. Caminada and Dov M. Gabbay. A logical account of formal argumentation. *Studia Logica*, 93(2-3):109–145, 2009.

[7] Claudette Cayrol, Sylvie Doutre, and Jérôme Mengin. On decision problems related to the preferred semantics for argumentation frameworks. *J. Log. Comput.*, 13(3):377–403, 2003.

[8] Federico Cerutti, Paul E. Dunne, Massimiliano Giacomin, and Mauro Vallati. Computing preferred extensions in abstract argumentation: A sat-based approach. In *Theory and Applications of Formal Argumentation - Second International Workshop, TAFA 2013, Beijing, China, August 3-5, 2013, Revised Selected papers*, pages 176–193, 2013.

[9] Günther Charwat, Wolfgang Dvorák, Sarah Alice Gaggl, Johannes Peter Wallner, and Stefan Woltran. Methods for solving reasoning problems in abstract argumentation - A survey. *Artif. Intell.*, 220:28–63, 2015.

[10] Yannis Dimopoulos, Vangelis Magirou, and Christos H. Papadimitriou. On kernels, defaults and even graphs. *Ann. Math. Artif. Intell.*, 20(1-4):1–12, 1997.

[11] Sylvie Doutre and Jérôme Mengin. Preferred extensions of argumentation frameworks: Query answering and computation. In *Automated Reasoning, First International Joint Conference, IJCAR 2001, Siena, Italy, June 18-23, 2001, Proceedings*, pages 272–288, 2001.

[12] Phan Minh Dung. On the acceptability of arguments and its fundamental role in nonmonotonic reasoning, logic programming and n-person games. *Artif. Intell.*, 77(2):321–358, 1995.

[13] Phan Minh Dung, Paolo Mancarella, and Francesca Toni. Computing ideal sceptical argumentation. *Artif. Intell.*, 171(10-15):642–674, 2007.

[14] Paul E. Dunne. Computational properties of argument systems satisfying graph-theoretic constraints. *Artif. Intell.*, 171(10-15):701–729, 2007.

[15] Niklas Eén and Niklas Sörensson. An extensible sat-solver. In *Theory and Applications of Satisfiability Testing, 6th International Conference, SAT 2003. Santa Margherita Ligure, Italy, May 5-8, 2003 Selected Revised Papers*, pages 502–518, 2003.

[16] Luca Longo and Pierpaolo Dondio. Defeasible reasoning and argument-based systems in medical fields: An informal overview. In *2014 IEEE 27th International Symposium on Computer-Based Medical Systems, New York, NY, USA, May 27-29, 2014*, pages 376–381, 2014.

[17] S. Modgil, F. Toni, F. Bex, I. Bratko, C.I. Chesñevar, W. Dvořák, M.A. Falappa, X. Fan, S.A. Gaggl, A.J. García, M.P. González, T.F. Gordon, J. Leite, M. Možina, C. Reed, G.R. Simari, S. Szeider, P. Torroni, and S. Woltran. The added value of argumentation. In Sascha Ossowski, editor, *Agreement Technologies*, volume 8 of *Law, Governance and Technology Series*, pages 357–403. Springer Netherlands, 2013.

[18] Samer Nofal, Katie Atkinson, and Paul E. Dunne. Algorithms for argumentation semantics: Labeling attacks as a generalization of labeling arguments. *J. Artif. Intell. Res. (JAIR)*, 49:635–668, 2014.

[19] Samer Nofal, Katie Atkinson, and Paul E. Dunne. Algorithms for decision problems in argument systems under preferred semantics. *Artif. Intell.*, 207:23–51, 2014.

[20] Nouredine Tamani, Patricio Mosse, Madalina Croitoru, Patrice Buche, Valrie Guillard, Carole Guillaume, and Nathalie Gontard. An argumentation system for eco-efficient packaging material selection. *Computers and Electronics in Agriculture*, 113(0):174 – 192, 2015.

[21] Phan Minh Thang, Phan Minh Dung, and Nguyen Duy Hung. Towards a common framework for dialectical proof procedures in abstract argumentation. *J. Log. Comput.*, 19(6):1071–1109, 2009.

[22] Matthias Thimm and Serena Villata. System descriptions of the first international competition on computational models of argumentation (iccma'15). *CoRR*, abs/1510.05373, 2015.

[23] Matthias Thimm, Serena Villata, Federico Cerutti, Nir Oren, Hannes Strass, and Mauro Vallati. Summary report of the first international competition on computational models of argumentation. *AI Magazine*, 37(1):102, 2016.

[24] Bart Verheij. Two approaches to dialectical argumentation: admissible sets and argumentation stages. In *Proceedings of the Eighth Dutch Conference on Artificial Intelligence*, pages 357–368, 1996.

[25] Bart Verheij. A labeling approach to the computation of credulous acceptance in argumentation. In *IJCAI 2007, Proceedings of the 20th International Joint Conference on Artificial Intelligence, Hyderabad, India, January 6-12, 2007*, pages 623–628, 2007.