(12) INTERNATIONAL APPLICATION PUBLISHED UNDER THE PATENT COOPERATION TREATY (PCT)

(19) World Intellectual Property Organization
International Bureau

(43) International Publication Date
21 November 2013 (21.11.2013)

WIPO | PCT

(10) International Publication Number
WO 2013/171503 Al

(51) International Patent Classification:
H01B 17/44 (2006.01) *H01 T 19/02* (2006.01)

(21) International Application Number:
PCT/GB20 13/05 1275

(22) International Filing Date:
17 May 2013 (17.05.2013)

(25) Filing Language: English

(26) Publication Language: English

(30) Priority Data:
1208885.2 18 May 2012 (18.05.2012) GB

(71) Applicants: **UNIVERSITY OF MANCHESTER** [GB/GB]; Oxford Road, Manchester Greater Manchester M13 9PL (GB). **EPL COMPOSITE SOLUTIONS LIMITED** [GB/GB]; Unit 10, Charnwood Business Park, North Road, Loughborough Leicestershire LE1 1 1QJ (GB).

(72) Inventors: **ROWLAND, Simon Mark;** 17 Woodlands Way, Tarporley Cheshire CW6 OTP (GB). **PEESAPATI, Vidyadhar;** Vienna Road, Edgeley, Stockport Greater Manchester SK3 9QH (GB). **ZACHARIADES, Christos;** Flat 55, Montana House, 136 Princess Street, Manchester Greater Manchester M1 7AF (GB). **COTTON, Ian;** 34 Heath Road, Wirral Merseyside CH63 7PY (GB). **RHODES, Peter Donald;** Flat 11, 77 Musters Road, West Bridgford, Nottingham Nottinghamshire NG2 7PY (GB). **CHAMBERS, David;** 10 Lady Bay Road, Nottingham Nottinghamshire NG2 5BJ (GB).

(74) Agents: **HACKNEY, Nigel** et al; Mewburn Ellis LLP, 33 Gutter Lane, London, Greater London EC2V 8AS (GB).

(81) Designated States *(unless otherwise indicated, for every kind of national protection available):* AE, AG, AL, AM, AO, AT, AU, AZ, BA, BB, BG, BH, BN, BR, BW, BY, BZ, CA, CH, CL, CN, CO, CR, CU, CZ, DE, DK, DM, DO, DZ, EC, EE, EG, ES, FI, GB, GD, GE, GH, GM, GT, HN, HR, HU, ID, IL, IN, IS, JP, KE, KG, KM, KN, KP, KR, KZ, LA, LC, LK, LR, LS, LT, LU, LY, MA, MD,

[Continued on nextpage]

(54) Title: A GRADING DEVICE

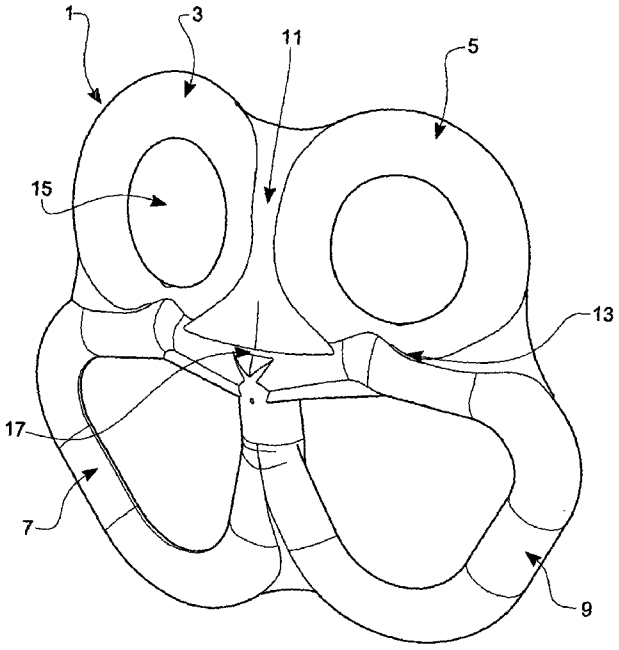

FIG 1

(57) Abstract: The present invention relates to grading devices (1) for reducing electrical stress in two or more electrically insulating members (29) of an electricity network tower. Preferably, a grading device (1) for reducing electrical stress in two or more electrically insulating members (29) of an electricity network tower, each electrically insulating member (29) having means for connecting the electrically insulating member (29) to an electrical power line supported by the electricity network tower, is provided, wherein: the grading device (1) includes two or more grading rings (3, 5, 7, 9), each of which is shaped so that in use it completely or substantially surrounds a respective one of the electrically insulating members (29); and the two or more grading rings (3, 5, 7, 9) are connected together.

WO 2013/171503 A1

ME, MG, MK, MN, MW, MX, MY, MZ, NA, NG, NI, NO, NZ, OM, PA, PE, PG, PH, PL, PT, QA, RO, RS, RU, RW, SC, SD, SE, SG, SK, SL, SM, ST, SV, SY, TH, TJ, TM, TN, TR, TT, TZ, UA, UG, US, UZ, VC, VN, ZA, ZM, ZW.

(84) Designated States *(unless otherwise indicated, for every Mnd of regional protection available):* ARIPO (BW, GH, GM, KE, LR, LS, MW, MZ, NA, RW, SD, SL, SZ, TZ, UG, ZM, ZW), Eurasian (AM, AZ, BY, KG, KZ, RU, TJ, TM), European (AL, AT, BE, BG, CH, CY, CZ, DE, DK, EE, ES, FI, FR, GB, GR, HR, HU, IE, IS, IT, LT, LU, LV, MC, MK, MT, NL, NO, PL, PT, RO, RS, SE, SI, SK, SM, TR), OAPI (BF, BJ, CF, CG, CI, CM, GA, GN, GQ, GW, ML, MR, NE, SN, TD, TG).

Published:

— *with international search report (Art. 21(3))*

A Grading Device

The present invention relates to grading devices for reducing electrical stress in two or more electrically insulating members of an electricity network tower.

Background

In this application, references to an electricity network tower may mean an electricity transmission tower, and/or an electricity distribution tower, and/or towers used in any other parts of an electricity network. Furthermore, references to an electricity network may mean an electricity transmission network, and/or an electricity distribution network, and/or any other parts of an electricity network.

A conventional electricity network tower used in an electricity network (which may also be called an electricity pylon in the United Kingdom and parts of Europe) has a body made of steel, including steel cross-arms. Electrical power lines are suspended from the ends of the cross-arms by insulator strings, e.g. a series of identical disc-shaped insulators that attach to each other with metal clevis pins or ball and socket links.

Commonly, one or more rings of conductive material (e.g. metal), which may be referred to as a grading ring, a corona ring or an anti-corona ring, are positioned around the insulator string, generally at one or both ends of the insulator string. As discussed below, including a grading ring around the insulator string may help to prevent the occurrence of corona discharge, and to even out the voltage distribution along the insulator string.

Corona discharge is a well-known phenomenon in high and extra high voltage applications. Corona discharge takes place in regions characterised by high voltage gradients, and consequently by high electric field magnitudes. Once the electric field magnitude at a certain location overcomes the dielectric strength of air, the surrounding air becomes ionised to form a conductive region, and corona discharge phenomena occur.

Corona discharge occurring in an electricity network tower normally manifests itself through the emission of light, the emission of audible noise and the production of RF interference. Such effects may be unacceptable for surrounding equipment, people or animals. In addition, the occurrence of corona discharge reduces the efficiency of the electricity network. It may also lead to the production of ozone, which may cause damage to the insulating string and to other components of the electricity network tower.

A grading ring positioned around the insulator string may act to distribute the electric field around the insulator string, and may reduce the maximum value of the electric field magnitude to a value at which corona discharge does not occur. Thus, positioning a grading ring around a particular part of the insulator string may prevent corona discharge from occurring at that part. Typically, grading rings are positioned at an end of the insulator string closest to the electric power line, as this is where the greatest electric field magnitude is likely to be experienced.

Positioning a grading ring around the end of the insulator string that supports the electrical power line may reduce the percentage of the voltage on that end of the insulator string, and may therefore improve (i.e. even out) the voltage distribution along the insulator string. Evening out of the voltage distribution along the insulator string reduces the peak electric field magnitude experienced by the insulator string. Thus, the reliability and lifetime of the insulator string may be improved.

Recently, new electricity network towers have been proposed in which the steel cross-arms are replaced with insulating cross-arms. For example in PCT/GB/201 0/001 574 an electricity network tower is proposed in which the conventional conductive cross-arms are replaced by electrically insulating cross-arms formed from electrically insulating members. With such an arrangement, the electrical power line may be suspended directly from the end of the insulating cross-arm, dispensing with the need for the dangling insulator strings from which the electrical power lines are suspended in a conventional electricity network tower.

Fig. 7 shows an electrically insulating cross-arm as disclosed in PCT/GB/201 0/001 574. The electrically insulating cross-arm includes two lower electrically insulating members 103 and two upper electrically insulating members 105. Distal ends 107 of the four electrically insulating members 103, 105 are each attached to a conductor support bracket 109, forming an apex or nose of the cross-arm. Proximal ends 111 of the four electrically insulating members 103, 105 are adapted for attachment to the body of an electricity network tower. The conductor support bracket 109 holds the ends of the four electrically insulating members 103, 105 and also supports the electrical power lines 113.

Similariy to the situation with a conventional electricity network tower, with the new electricity network towers it is advantageous to prevent corona discharge from occurring around the electrically insulating members of the cross-arms from which the electrical power lines are

suspended, and to improve the distribution of voltage along the insulating members, for similar reasons to those discussed above.

Thus, in the embodiment described in PCT/GB/201 0/001 574, as illustrated in Fig. 7, a single conductive grading ring 115 is positioned around all four of the electrically insulating members 103, 105, adjacent to that point at which the four electrically insulating members 103, 105 are attached to the conductor support bracket .

Similarly, "Insulator cross-arms for 345-kV EHV transmission line", I Kimoto, K Kito and K Ueno, IEEE Trans PAS, Vol. 90, pp 756-764, 1971 , discloses a transmission tower having four electrically insulating members that extend from the tower and meet at a point. A single electrical stress-relief device is provided which collectively surrounds all four insulators at the point at which they meet.

Summary of the Invention

The present inventors have realised that collectively surrounding all of the electrically insulating members of an electrically insulating cross-arm with a single grading ring in a known manner (i.e. as in the arrangement disclosed in PCT/GB/201 0/001 574 and shown in Fig. 7) may not provide sufficient reduction in electrical stress in each of the electrically insulating members. If the reduction in electrical stress in the electrically insulating members is insufficient, problems such as corona discharge and insufficient evening out, or smoothing, of the voltage along the electrically insulating members may occur.

At its most general, the present invention provides a grading device (which may alternatively be called an electrical stress relief device, a corona device, or an anti-corona device) that substantially surrounds two or more electrically insulating members, each of which has means for connecting the electrically insulating member to an electrical power line, and also protrudes between them.

According to a first aspect of the present invention, there is provided a grading device for reducing electrical stress in two or more electrically insulating members of an electricity network tower, each electrically insulating member having means for connecting the electrically insulating member to an electrical power line supported by the electricity network tower, wherein: the grading device includes two or more grading rings, each of which is shaped so that in use it completely or substantially surrounds a respective one of the two or

more electrically insulating members; and the two or more grading rings are connected together.

Each of the two or more grading rings may be shaped so that in use it completely or substantially surrounds a main, insulting part of the electrically insulating member (i.e. the part of the electrically insulating member other than the means for connecting the electrically insulating member to an electrical power line). Alternatively, each of the two or more grading rings may be shaped so that in use it completely or substantially surrounds the means for connecting the electrically insulating member to an electrical power line. Of course, the grading rings may be shaped so that in use they completely or substantially surround both the main, insulating part of the electrically insulating member and the means for connecting the electrically insulating member to an electrical power line, i.e. the grading ring may overlap both of these parts.

In practice, the means for connecting the electrically insulating member to an electrical power line will be electrically conductive, i.e. it will be made of an electrically conductive material, such as a metal. Of course, even though the means for connecting the electrically insulating member to an electrical power line is electrically conductive, the electrically insulating member as a whole is still electrically insulating.

Although in the above description the means for connecting the electrically insulating member to an electrical power line is described as being part of the electrically insulating member, the means may instead be a separate, distinct part. For example, the means may comprise a connector for connecting to an end of the electrically insulating member, and/or parts of the electricity network tower to which the electrically insulating member is connected, e.g. a rod, plate or strut, of a conductor support package, e.g. similar to that shown in Fig. 7. in this situation, the device according to the present invention may, in use, be positioned so that the two or more grading rings completely or substantially surround the means for connecting the electrically insulating member to an electrical power line, e.g. the end connector and/or parts of the electricity network tower, etc., rather than the electrically insulating members themselves.

"Completely surrounds" means that the grading ring goes around the entirety of the perimeter of the electrically insulating member in a continuous path or loop, whereas "substantially surrounds" means that the grading ring does not form a continuous path or loop around the entirety of the perimeter of the electrically insulating member. For example, the grading ring may have one or more gaps or breaks in its perimeter, e.g. to facilitate positioning of the

grading ring around one of the electrically insulating members. For example, the grading ring may go around between 75% and 100% of the perimeter of the electrically insulating member (i.e. around an angle of between 270 degrees and 360 degrees). More preferably, the grading ring may go around between 85% and 100% of the perimeter of the electrically insulating member. Indeed, the grading ring may go around between 95% and 100% of the perimeter of the electrically insulating member.

"A respective one of the two or more electrically insulating members" means that each grading ring only surrounds or substantially surrounds a single electrically insulating member, i.e. it does not surround or substantially surround any other electrically insulating members, in contrast to the prior art arrangement in which the grading ring simultaneously surrounds more than one electrically insulating member at once.

The term "ring" does not imply a particular shape for the grading rings. In particular, the grading rings do not have to have circular shape or a regular shape, and may have regular or irregular shapes.

The term "connected together" may mean that the grading device is a single continuous device, i.e. a "one-piece" device. The grading rings may be connected together by portions of different grading rings, e.g. sides of the grading rings, being merged or combined together into single portions, e.g. to form figure of eight arrangements, or grid-like arrangements. On the other hand, the term "connected together" may also mean that the grading rings are positioned in contact against each other or are attached or secured together, e.g. after their initial manufacture.

According to the first aspect of the invention, when the grading device is in use, each of the electrically insulating members of the electricity network tower are separately and independently surrounded or substantially surrounded by respective, different grading rings, i.e. unlike in the prior art arrangements in which a single grading ring surrounds all of the insulating members simultaneously, with the present invention a single grading ring surrounds or substantially surrounds only a single insulating member.

Thus, in contrast to the prior art arrangements, the grading device according to the first aspect of the invention has portions that extend between adjacent ones of the two or more electrically insulating members to separate or substantially separate electrically insulating members within the grading device.

Because each insulating member is surrounded or substantially surrounded by a grading ring in the present invention, the grading device of the present invention more effectively reduces the electrical stress in each of the insulating members, relative to an arrangement in which a single grading ring simultaneously surrounds all of the electrically insulating members at once, as in the known arrangements. Thus, a more significant reduction in electrical stress in the insulating members may be achieved with the grading device of the present invention, and the grading device may therefore be more effective at preventing corona discharge and improving the voltage distribution than the prior art devices.

The connection of the grading rings in a single device may mean that the grading device can be positioned around the electrically insulating members closer to e.g. an end of a cross-arm of the electricity network tower, e.g. an apex of the cross-arm at which the electrically insulating members meet at a point. When the electrically insulating members converge in this way, there may not be enough space to provide separate grading rings for each of the electrically insulating members without physical interference occurring between the grading rings, and thus the design cannot be optimised. Connecting the grading rings together, as in the present invention, may allow greater design flexibility and therefore reduced electrical stresses.

The cross-arm may be an electrically insulating cross-arm of an electricity network tower, e.g. an electricity transmission tower, for example an electrically insulating cross-arm as disclosed in PCT/GB/201 0/001 574, i.e. a cross-arm similar to the one illustrated in Fig. 7 but with the grading ring 115 removed and replaced with the grading device of the present invention (which may be positioned in the same place as the location of the grading ring 115 in Fig. 7, or may be positioned in a different place).

Considered an alternative way, the present invention could alternatively be considered as providing a grading device for reducing electrical stress in two or more electrically insulating members, wherein the grading device is shaped to: substantially surround the two or more electrically insulating members; and extend between adjacent ones of the two or more electrically insulating members

One or more of the grading rings may have a gap or a break in the perimeter thereof. Thus, the grading ring may not form a continuous loop or path around the electrically insulating member.

The grading rings may be side by side, i.e. the grading rings may be positioned next to or adjacent to each other, for example to form an approximately square or grid like arrangement, or some other arrangement (depending on the number of grading rings). Such an arrangement could be said to be an approximately or substantially planar arrangement, although of course the grading device does not need to be entirely flat (it is preferably not entirely flat and may be somewhat curved or bent), and will not be two-dimensional.

Preferably, the grading rings are arranged side by side so that central axes of the grading rings converge towards a point to one side of the grading device, and diverge away from each other on another opposite side of the grading device. This arrangement may allow use of the grading device in a cross-arm of an electricity network tower in which the insulating members converge towards a point, for example a cross-arm of the type disclosed in PCT/GB/201 0/001 574, i.e. the grading rings can be arranged or configured in such a way that in use the convergence/divergence of the central axes of their apertures align with the convergence of central axes of the converging insulating members of the cross-arm.
In preferred embodiments of the invention, each of the grading rings is substantially wider (i.e. across an aperture defined by the grading ring) than it is thick (i.e. in a direction parallel to a central axis of an aperture defined by the grading ring). Put another way, the grading ring is preferably substantially larger in two perpendicular directions (i.e. x and y in Cartesian coordinates) than it is in a third mutually perpendicular direction (i.e. z in Cartesian coordinates). Thus, the grading ring is preferably "ring-like" as opposed to "tube-like".

Thus, when the grading rings are said to be side by side, this may mean that perimeters of two or more rings are in contact, to form a unitary body in which the two or more grading rings are side by side with other grading rings.

The grading device may include four grading rings, each of which in use completely or substantially surrounds a respective one of four electrically insulating members. Thus, the grading device may reduce electrical stress in four electrically insulating members of an insulating cross-arm simultaneously. For example, the grading device may define four separate apertures for separately receiving the four electrically insulating members. These apertures may be approximately arranged in a square formation. Of course, the grading device may include more or fewer grading rings than this. For example, the grading ring may include three grading rings, each of which in use completely or substantially surrounds a respective one of three electrically insulating members.

One or more of the grading rings may define or substantially define a non-circular aperture for surrounding or substantially surrounding one of the electrically insulating members. The aperture may be an irregularly shaped aperture, e.g. one without any symmetry. Thus, the grading device may be able to provide better electrical stress relief for electrically insulating members with non-circular cross-sections.

One or more of the grading rings may define or substantially define an aperture with an irregular shape, i.e. a shape without a line of symmetry, and/or without rotational symmetry.

Preferably, one or more of the grading rings defines or substantially defines an aperture having a shape that, in use, matches the shape (i.e. a cross-sectional shape) of the electrically insulating member being surrounded by the grading ring.

The two or more grading rings may merge together in a central region of the grading device.

The grading device may be made by casting. Forming the grading device by casting, e.g. rather than by bending an initially straight tube, may make it possible to achieve tighter bends that more closely match the shape of the electrically insulating members. Thus, it may be possible to produce a grading device with a more complicated geometry. The grading device may be formed as a single casting, which may be more efficient than forming the device from more than one casting. Alternatively, the grading device may be formed from multiple castings, which are then connected together to form the grading device. For example, the grading device may be cast as two or more parts (e.g. two halves, such as left and right halves, or upper and lower halves) which are then connected or attached together to form the grading device. Of course, the grading device might be made in different ways, for example bending a tube into the desired shape, or connecting various parts together to make the desired shape.

The grading device may further include an additional grading ring which in use completely or substantially surrounds the same electrically insulating member as one of the two or more grading rings. The additional grading ring may more closely surround the electrically insulating member than said one of the two or more grading rings. The provision of an additional grading ring that more closely surrounds the electrically insulating member may provide better electrical stress control in the electrically insulating member. The position of the additional grading ring relative to the rest of the grading device may be variable, i.e. it may be possible to move the additional grading ring, e.g. along an axis of the grading device.

The grading device may have attachment means for attaching the grading device to a nose portion of an electrically insulating cross-arm. The attachment means may include one or more bolt holes which in use receive one or more bolts tapped through a plate fixed to the nose portion of the electrically insulating cross-arm. This attachment means may avoid the need for additional parts on the grading device and reduce the complexity of the geometry. Thus, where the grading device is formed by casting, the complexity of the casting process may be reduced.

Alternatively, the grading device may be manufactured (e.g. cast, attached or connected) as part of a nose portion of an electrically insulating cross-arm. I.e. the nose portion may be manufactured with the grading device already attached or cast as a part of the nose portion, as an integral part of the nose portion.

According to a second aspect of the invention, there is provided an electrically insulating cross-arm for an electricity network tower having: two or more electrically insulating members, each electrically insulating member having means for connecting the electrically insulating member to an electrical power line supported by the electricity network tower; and a grading device for reducing electrical stress in the two or more electrically insulating members, wherein the grading device: includes two or more grading rings, each of which completely or substantially surrounds a respective one of the two or more electrically insulating members; and the two or more grading rings are connected together.

Although the present invention has been described primarily with reference to an electrically insulating cross-arm for an electricity network tower, it may also be equally applicable to insulators associated with non-insulating cross-arms.

One or more of the grading rings may be shaped to define an aperture with a size of between 50 mm and 200 mm. "Size" may mean an average diameter of the aperture, or alternatively a maximum straight line distance from one side of the aperture to an opposite side of the aperture through a centre point of the aperture.

One or more of the grading rings may be shaped to define an aperture with a size of between 100 mm and 500 mm. More preferably, the size of the aperture may be between 150 mm and 400 mm.

In practice, the grading device is made from a conductive material, e.g. a metal. More preferably, the grading device is made from a conductive metal which is stable in an

outdoors environment, such as may be experienced by an electricity network tower. For example, the grading ring may be made of an aluminium alloy, or galvanised steel, e.g. a galvanised mild steel, or cast iron.

The grading device may be formed, or substantially formed, from one or more metal tubes (which may be hollow or solid). Preferably, the tube has a diameter which is large enough to prevent the grading device itself from being a source of corona discharge. Appropriate sizes for the tube can be readily determined based on the expected electric field that will be experienced by the grading device in practice, and also on the geometry of the surrounding apparatus, e.g. the geometry of the electricity network tower, e.g. using conventional equations such as Peek's Law.

One or more of the grading rings may define an aperture that is shaped so that in use it follows the contours (i.e. the edges or geometry) of the electrically insulating member that it is surrounding, so that the shape of the aperture is matched to the shape of the electrically insulating member. E.g. the shape of the aperture may be the same as a cross-sectional shape of the electrically insulating member at the point where it is being surrounded by the grading ring. Thus, if the electrically insulating member has a non-circular cross-sectional shape, for example a regular shape other than a circle, or an irregular shape, the aperture will also have a non-circular shape. One or more portions of the grading ring defining the aperture may be convex, i.e. they may bulge, protrude or stick-out into or part way across the aperture defined by the grading ring, in order to more closely match the geometry of an electrically insulating member.

Brief description of the Figures

Exemplary embodiments of the invention will now be described with reference to the accompanying drawings, in which:

Fig. 1 shows a perspective view, from the front, of a grading device according to an embodiment of the present invention;

Fig. 2 shows a perspective view, from the rear, of the grading device shown in Fig. 1 in position around four insulating members;

Fig. 3 shows a perspective view, from the front, of the grading device shown in Fig. 1 surrounding two insulating members and a secondary grading ring surrounding one of the two insulating members;

Fig. 4 shows a perspective view, from the side, of the grading device shown in Fig. 1 surrounding two insulating members and a secondary grading ring surrounding one of the two insulating members;

Fig. 5 shows a perspective view of a ladder support according to an embodiment of the invention;

Fig. 6 shows a perspective view of a ladder support according to an embodiment of the invention attached to a nose cone of a cross-arm of an electricity network tower;

Fig. 7 shows a prior art arrangement in which a single grading ring is positioned around four insulating members of a cross-arm.

Detailed description

As shown in Fig. 1, a grading device 1 according to one embodiment of the present invention can be considered as being formed from four grading rings 3, 5, 7, 9 that are connected together. For example, grading rings 3 and 5 may be connected together, e.g. by being merged together along the common edge 11. Similarly, grading rings 5 and 9 may be connected together, e.g. by being merged together along the common edge 13. In this embodiment, all four of the grading rings 3, 5, 7, 9 merge together in a central region 17 of the grading device 1. In this embodiment, grading rings 3, 5, 7 and 9 are continuous grading rings without any gaps or breaks. However, in other embodiments, one or more gaps may be provided in the perimeter of one or more of the grading rings 3, 5, 7, 9 e.g. to facilitate positioning of the grading ring around an electrically insulating member.

Preferably, each of the four grading rings 3, 5, 7, 9 defines an aperture 15 for receiving a single insulating member of an insulating cross-arm of an electricity network tower, so that in use each grading ring 3, 5, 7, 9 will surround a single insulating member.

In this embodiment, two of the grading rings 3, 5 define approximately circular shaped apertures, and two of the grading rings 7, 9 define non-circular apertures, in this case

irregularly shaped apertures. The apertures are shaped to match the shapes of the electrically insulating members that, in use, will be surrounded by the grading rings.

The grading rings 3, 5, 7 and 9 may be positioned side by side, e.g. next to each other or proximate to each other, in an approximately square or grid-like arrangement. Such an arrangement could be said to be approximately planar, although of course the grading device 1 is not entirely flat, and is three-dimensional. Indeed, it can be seen in Fig. 1 that the grading device 1 may not be entirely flat, and instead may have an apex formed at the central region 17 thereof, so that the central axes of the four apertures 15 are not parallel to each other. Instead, the central axes of the four apertures 15 may diverge on moving away from the front side of the grading device 1. This arrangement may facilitate positioning of the grading device 1adjacent to an apex of the cross-arm, where the four insulating members converge at a point and therefore are not parallel to each other (i.e. the central axes of the four apertures 15 can be configured so that in use they align with the central axes of the converging insulating members).

The grading device 1 shown in Fig. 1 could alternatively be considered as being formed by a plate that defines the four apertures 15 for separately and individually receiving and surrounding the electrically insulating members.

As shown in Fig. 2, the grading device 1 can have attachment means 21 for attaching the grading device 1 to a nose portion 23 of an electrically insulating cross-arm. The attachment means 21 can include bolt holes 21 for receiving bolts tapped through a plate 25 fixed to the nose portion 23. In other embodiments, the grading device may be attached to the nose portion in other ways that would be apparent to a person skilled in the art. In some embodiments, the grading device may be manufactured at the same time at the nose portion, i.e. it may be cast in one piece with the nose portion or manufactured as an integral piece of the nose portion.

As shown in Fig. 2, the irregular shaped aperture defined by grading ring 9 may enable the grading device 1 to surround the complex geometry of the metallic termination 27 at the end of one of the electrically insulating members 29, i.e. the geometry or shape of the aperture defined by the grading ring 9 matches (i.e. is substantially the same as) the geometry of the electrically insulating member 29. This may allow the grading ring 9 to more closely surround the surface of the electrically insulating member 29, and therefore improve the electrical stress relief in the electrically insulating member 29. The divergence of the central

axes of the apertures 15 of the grading rings 3, 5, 7, 9 to accommodate the converging electrically insulating members is also more clearly visible in Fig. 2.

As shown in Fig. 2, in this embodiment the grading device 1 is positioned primarily around the metallic terminations 27 and connecting parts at the ends of the electrically insulating members, rather than being positioned around the insulating parts of the electrically insulating members. In other embodiments, the grading device 1 may be differently positioned, i.e. it may instead be positioned around the insulating parts of the electrically insulating members, or even further to the right in the arrangement shown in Fig. 2 around one or more parts of the nose portion 23. The metallic terminations, and/or the parts of the nose portion 23 may be considered as being parts of the electrically insulating members, or may be considered as being separate parts.

Fig. 3 shows the grading device 1 in use with the grading rings 7 and 9 each surrounding an electrically insulating member 29, e.g. the electrically insulating members 29 each protrude through a different one of the apertures defined by the grading rings 7 and 9. The irregular shape of the aperture defined by the grading rings 7 and 9 facilitates the positioning of the electrically insulating members 29 in the apertures.

As shown in Fig. 3 and Fig. 4, in this embodiment an additional grading ring 31is provided to surround the same electrically insulating member as grading ring 9. Additional grading ring 31 may be smaller in size than grading ring 9, e.g. it has a smaller diameter, so that it more closely surrounds electrically insulating member 29 than the grading ring 9 does. The additional grading ring may allow for better control of the electrical stress in the electrically insulating member 29.

In this embodiment, the grading device 1 may be formed by casting, e.g. in a single piece. Of course, in other embodiments, it may be manufactured in a different manner. The additional grading ring 31 may also be manufactured by casting. Alternatively, the additional grading ring 31 may be manufactured in a different manner, for example by bending a metal tube (hollow or solid) into the required shape, or by connecting or bolting parts together.

Figure 5 shows a ladder support 41 according to a further aspect of the invention. The ladder support 41 enables a ladder to be connected or attached to the electrically insulating cross-arm. As shown in Fig. 5, preferably the ladder support 41 has attachment means, e.g. in the form of holes 43 formed in tabs 45 positioned at the ends of the ladder support 41.

The ladder support may be bent into a generally U-shaped shape, possibly with a curved bottom portion 47.

In this embodiment, the ladder support 41 is attached to the nose portion 23 of the cross-arm, preferably by side bolts positioned through the holes 43 and e.g. through corresponding holes in flanges of the nose portion 23. Positioning the ladder support 41 on the nose portion 23 of the cross-arm allows a ladder to be securely extended to the nose portion 23 of the cross-arm.

Figure 6 shows a ladder support 51 according to a more preferred embodiment of the invention, connected to the nose portion 23 of the cross-arm. The primary difference between this embodiment and the previous embodiment is that in this embodiment preferably two holes 43 are provided in each of the end tabs 45 of the ladder support 51. Thus, the ladder support 51 of this embodiment is connected to the nose portion 23 using e.g. side bolts positioned through all four of the holes 43 and corresponding holes 53 located in side flanges 55 of the nose portion 23 of the cross-arm.

Securing the ladder support 51 to the nose portion 23 using two bolts on each side provides greater redundancy. Thus a smaller diameter tube may be used for the ladder support 51 than for the ladder support 41 of the previous embodiment, which uses only one bolt on each side. The smaller diameter tube may allow for tighter bends to be formed in the ladder support 51, so that the ladder support 51 can preferably be formed with a substantially wide flat bottom part 57. This may facilitate attachment of a ladder to the ladder support. Thus, a ladder may be more easily and securely attached to the ladder support 51 on the nose portion 23 of the cross-arm.

However, it is important that the ladder support tube diameter is sufficiently large enough so that the ladder support tube does not act as a source of corona discharge itself. As previously discussed, an appropriate minimum sized can be calculated based on the expected voltage at the position of the ladder support tube, and on the geometry of the surrounding elements of the electricity network tower. Indeed, the ladder support tube may be integrated into the electrical stress management design for the whole cross-arm assembly.

Claims

1. A grading device for reducing electrical stress in two or more electrically insulating members of an electricity network tower, each electrically insulating member having means for connecting the electrically insulating member to an electrical power line supported by the electricity network tower, wherein:

the grading device includes two or more grading rings, each of which is shaped so that in use it completely or substantially surrounds a respective one of the electrically insulating members; and

the two or more grading rings are connected together.

2. A grading device according to claim 1, wherein one or more of the grading rings has a gap in the perimeter thereof.

3. A grading device according to any one of the previous claims, wherein the grading rings are side by side.

4. A grading device according to any one of the previous claims, wherein the grading device includes four grading rings, each of which in use completely or substantially surrounds a respective one of four electrically insulating members.

5. A grading device according to any one of claims 1 to 3, wherein the grading device includes three grading rings, each of which in use completely or substantially surrounds a respective one of three electrically insulating members.

6. A grading device according to any one of the previous claims, wherein one or more of the grading rings defines or substantially defines a non-circular aperture for surrounding or substantially surrounding one of the electrically insulating members.

7. A grading device according to any one of the previous claims, wherein one or more of the grading rings defines or substantially defines an aperture with an irregular shape.

8. A grading device according to any one of the previous claims, wherein one or more of the grading rings defines or substantially defines an aperture with a non-circular shape that, in use, follows the geometry of the electrically insulating member being surrounded by the grading ring.

9. A grading device according to any one of the previous claims, wherein the two or more grading rings merge together in a central region of the grading device.

10. A grading device according to any one of the previous claims, wherein the grading device is made by casting.

11. A grading device according to any one of the previous claims, wherein the grading device further includes an additional grading ring which in use completely or substantially surrounds the same electrically insulating member as one of the two or more grading rings.

12. A grading device according to claim 11, wherein the additional grading ring more closely surrounds the electrically insulating member than said one of the two or more grading rings.

13. A grading device according to any one of the previous claims, wherein the grading device has attachment means for attaching the grading device to a nose portion of an electrically insulating cross-arm.

14. A grading device according to claim 13, wherein the attachment means include one or more bolt holes which in use receive one or more bolts tapped through a plate fixed to the nose portion of the electrically insulating cross-arm.

15. An electrically insulating cross-arm for an electricity network tower having:

two or more electrically insulating members, each electrically insulating member having means for connecting the electrically insulating member to an electrical power line supported by the electricity network tower; and

a grading device for reducing electrical stress in the two or more electrically insulating members, wherein the grading device:

includes two or more grading rings, each of which completely or substantially surrounds a respective one of the two or more electrically insulating members; and

the two or more grading rings are connected together.

16. An electrically insulating cross-arm for an electricity network tower having:

two or more electrically insulating members, each electrically insulating member having means for connecting the electrically insulating member to an electrical power line supported by the electricity network tower; and

a grading device according to any one of claims 2 to 14, wherein each of the two or

more grading rings of the grading device completely or substantially surrounds a respective one of the two or more electrically insulating members.

17. A grading device substantially according to any embodiment herein described herein with reference to, and as illustrated in, Figs. 1 to 6.

18. An electrically insulating cross-arm substantially according to any one embodiment herein described with reference to, and as illustrated in, Figs. 1 to 6.

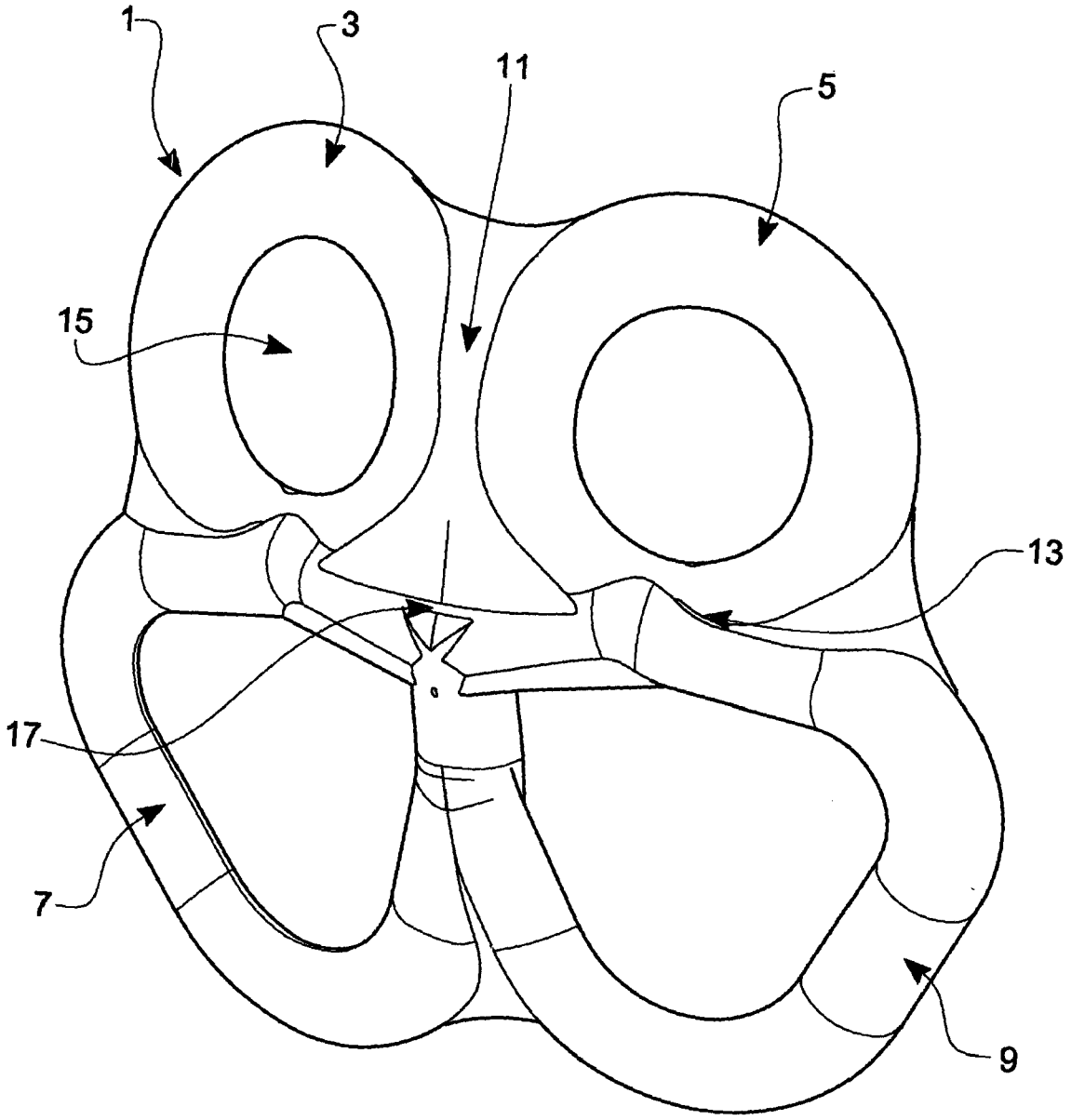

FIG 1

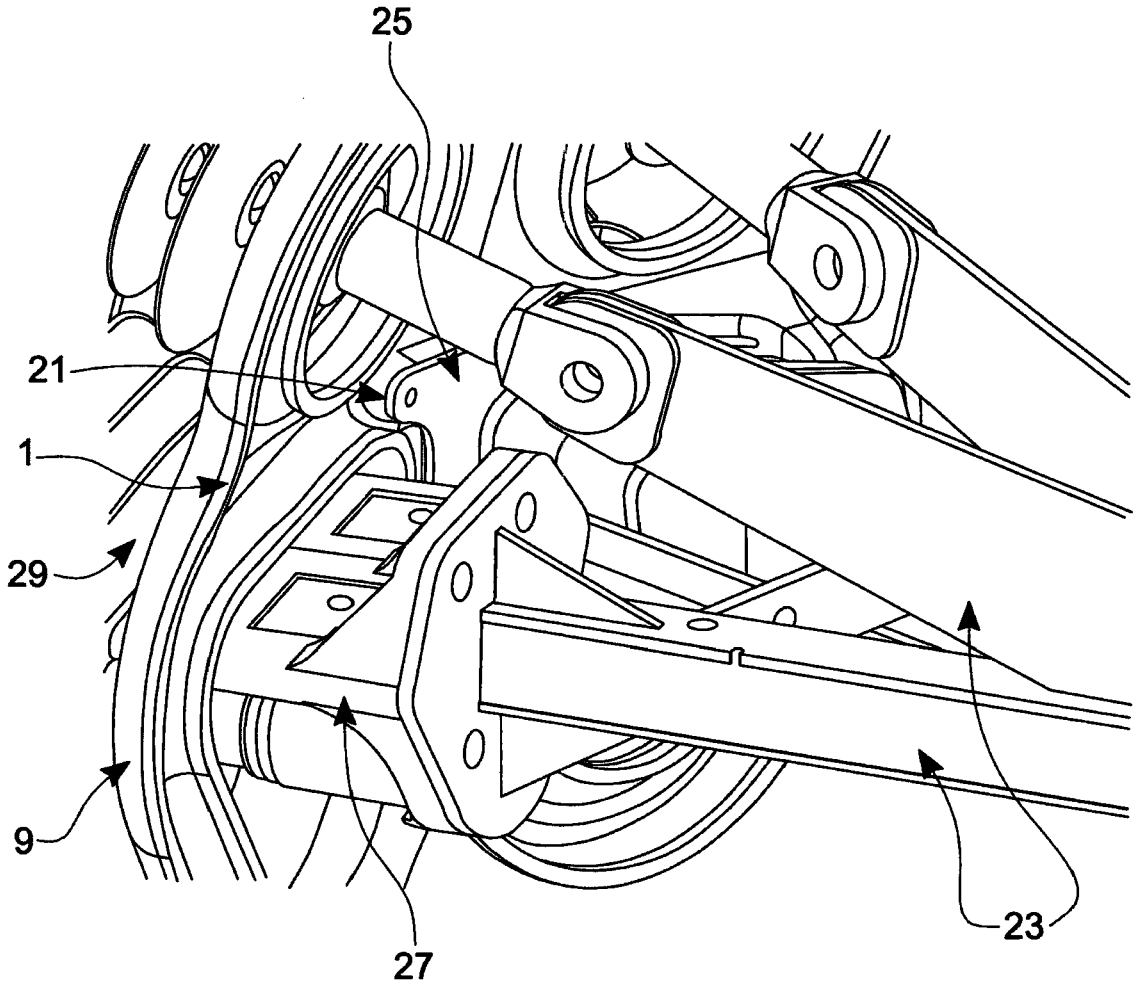

FIG 2

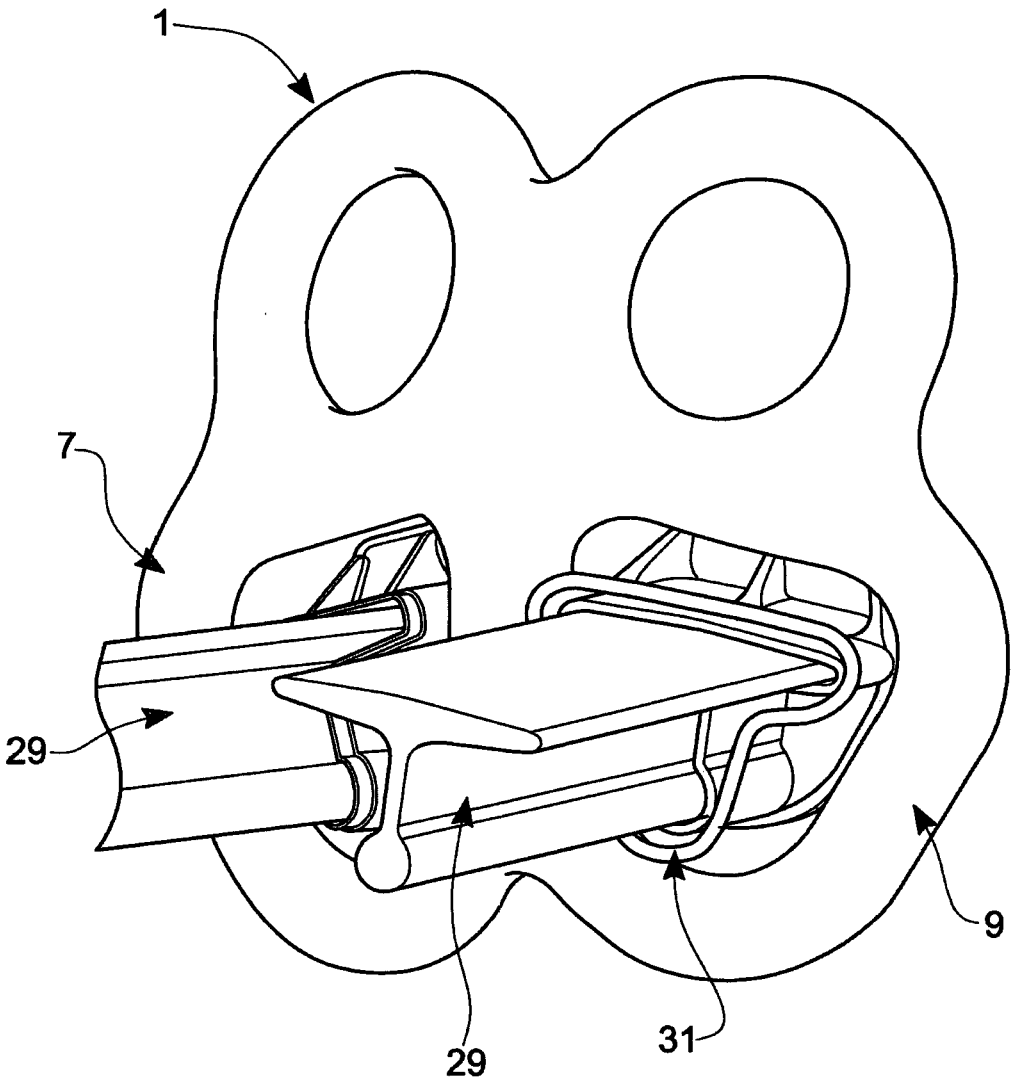

FIG 3

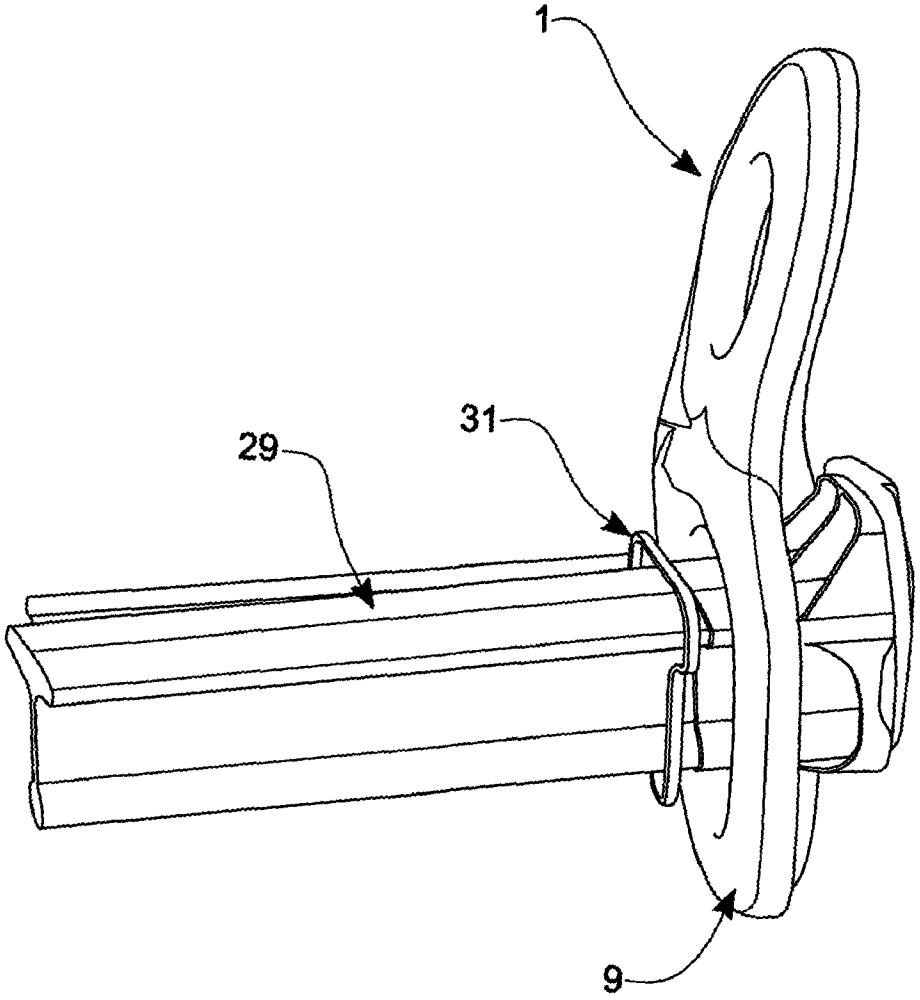

FIG 4

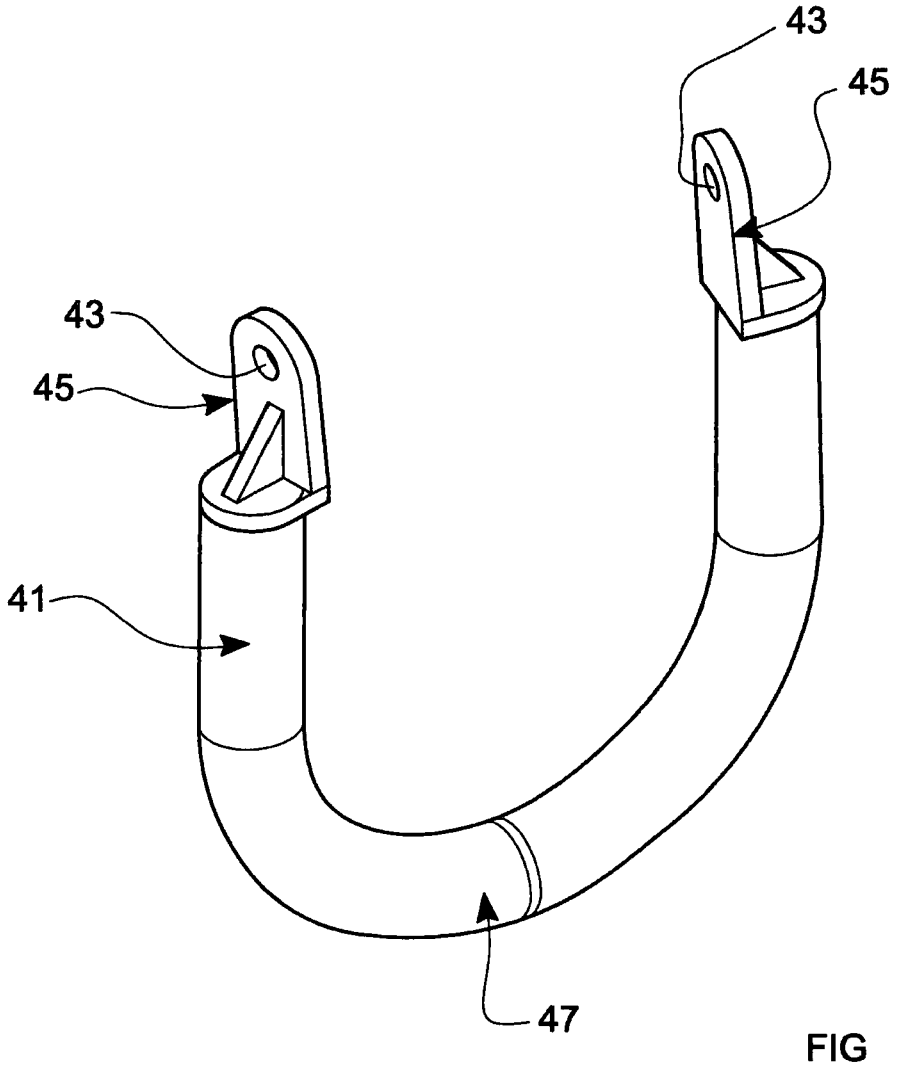

FIG 5

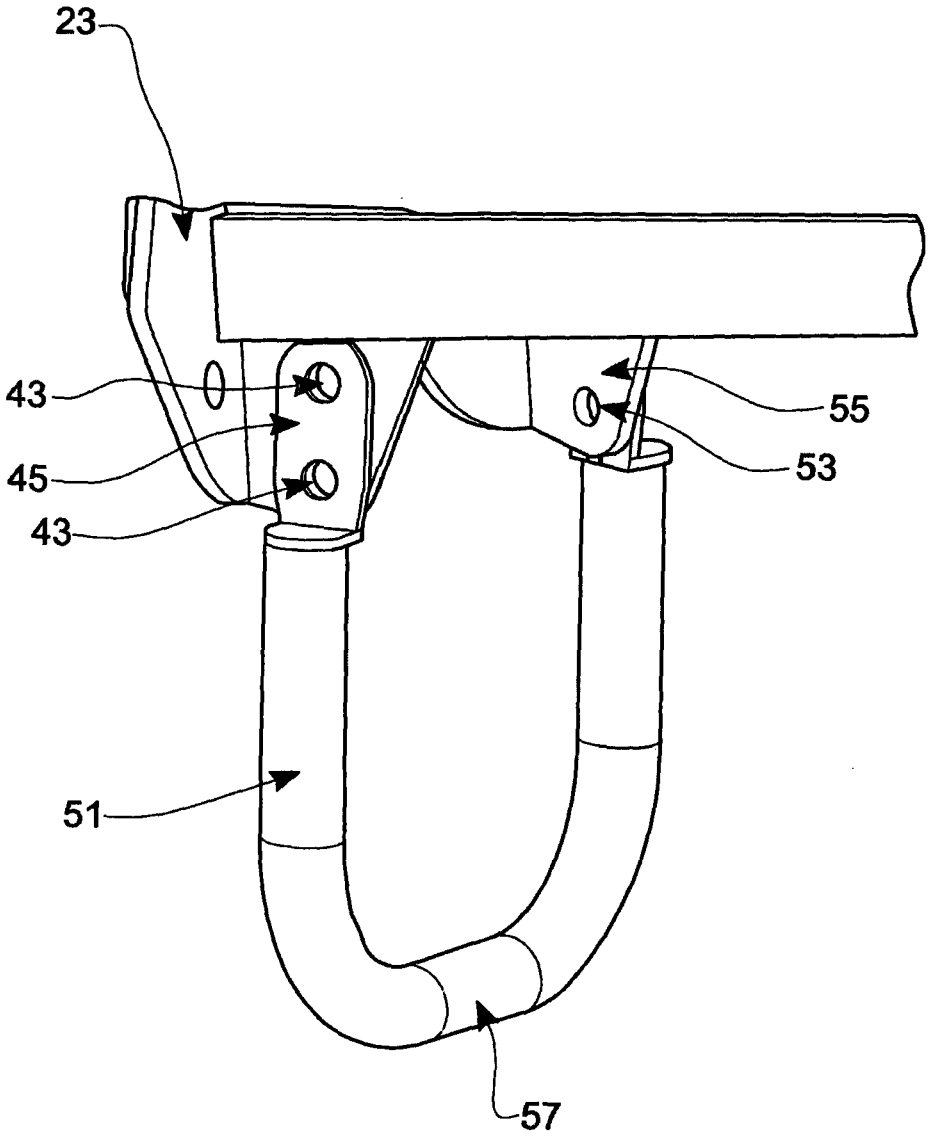

FIG 6

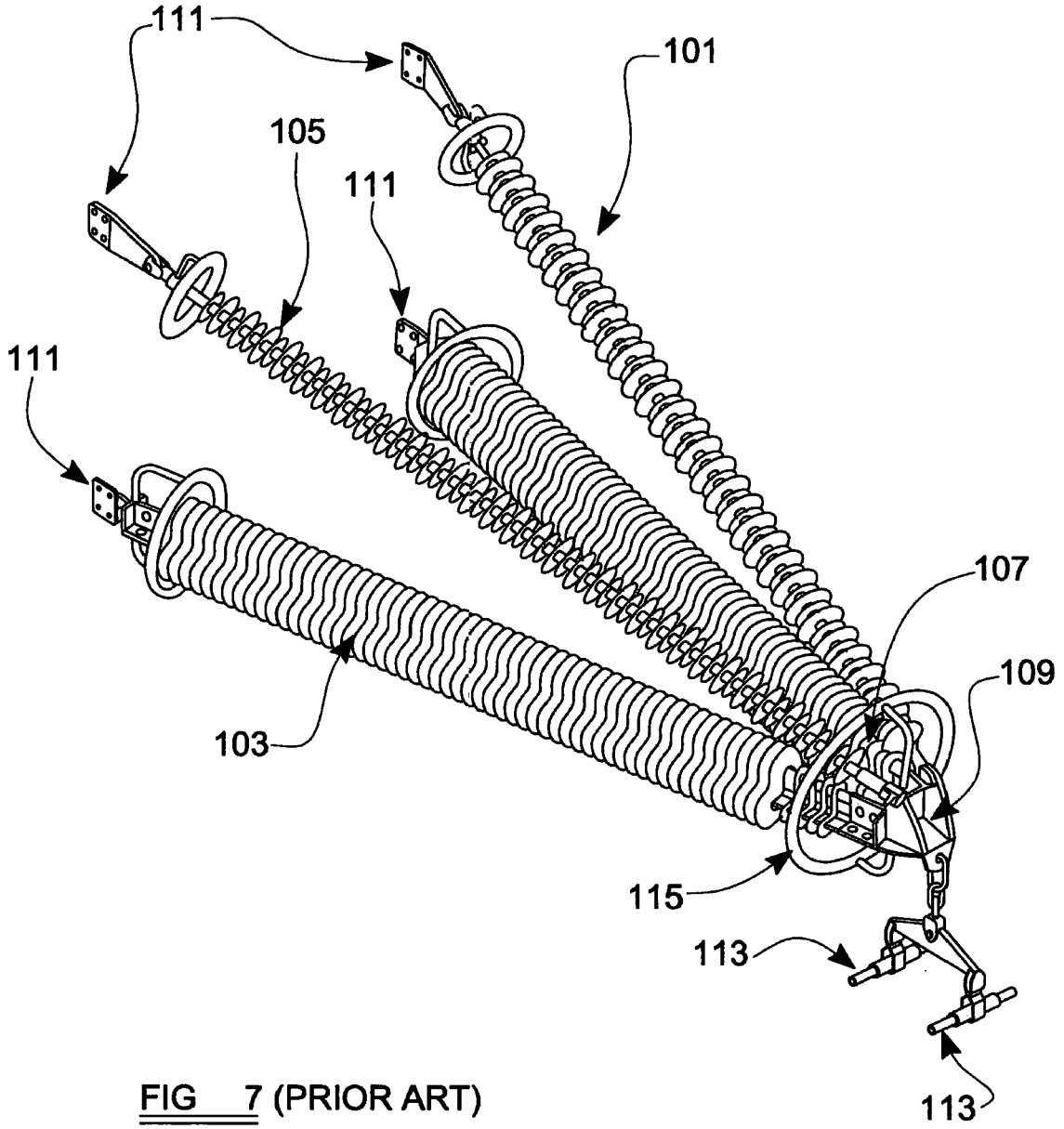

FIG 7 (PRIOR ART)

INTERNATIONAL SEARCH REPORT

International application No
PCT/GB2013/051275

A. CLASSIFICATION OF SUBJECT MATTER
INV. H01B17/44 H01T19/02
ADD.

According to International Patent Classification (IPC) or to both national classification and IPC

B. FIELDS SEARCHED

Minimum documentation searched (classification system followed by classification symbols)
H01B H01T

Documentation searched other than minimum documentation to the extent that such documents are included in the fields searched

Electronic data base consulted during the international search (name of data base and, where practicable, search terms used)

EPO-Internal

C. DOCUMENTS CONSIDERED TO BE RELEVANT

Category*	Citation of document, with indication, where appropriate, of the relevant passages	Relevant to claim No.
X	US 4 121 046 A (RJJITA HIROSHI ET AL) 17 October 1978 (1978-10-17) the whole document	1-8, 10-16
X	DE 749 316 C (UNKOWN) 21 November 1944 (1944-11-21) abstract; figures 1,2	1-3,5
X	US 3 240 870 A (HARMON ROBERT W) 15 March 1966 (1966-03-15) claims 1-11; figures 1-5	1-4,6-8
A	WO 2011/021006 A2 (UNIV MANCHESTER [GB]; EPL COMPOSITE SOLUTIONS LTD [GB]; COTTON IAN [GB]) 24 February 2011 (2011-02-24) cited in the application the whole document	1-18

☐ Further documents are listed in the continuation of Box C.

☒ See patent family annex.

* Special categories of cited documents :

"A" document defining the general state of the art which is not considered to be of particular relevance

"E" earlier application or patent but published on or after the international filing date

"L" documentwhich may throw doubts on priority claim(s) orwhich is cited to establish the publication date of another citation or other special reason (as specified)

"O" document referring to an oral disclosure, use, exhibition or other means

"P" document published prior to the international filing date but later than the priority date claimed

"T" later document published after the international filing date or priority date and not in conflict with the application but cited to understand the principle or theory underlying the invention

"X" document of particular relevance; the claimed invention cannot be considered novel or cannot be considered to involve an inventive step when the document is taken alone

"Y" document of particular relevance; the claimed invention cannot be considered to involve an inventive step when the document is combined with one or more other such documents, such combination being obvious to a person skilled in the art

"&" document member of the same patent family

Date of the actual completion of the international search	Date of mailing of the international search report
5 July 2013	15/07/2013

Name and mailing address of the ISA/	Authorized officer
European Patent Office, P.B. 5818 Patentlaan 2 NL - 2280 HV Rijswijk Tel. (+31-70) 340-2040, Fax: (+31-70) 340-3016	Ruppert, Christopher

INTERNATIONAL SEARCH REPORT

Information on patent family members

International application No
PCT/GB2013/051275

Patent document cited in search report	Publication date	Patent family member(s)	Publication date
US 4121046 A	17-10-1978	JP S5335192 A	01-04-1978
		JP S5751687 B2	04-11-1982
		US 4121046 A	17-10-1978
DE 749316 C	21-11-1944	NONE	
US 3240870 A	15-03-1966	NONE	
WO 2011021006 A2	24-02-2011	CA 2771695 A1	24-02-2011
		CN 102668288 A	12-09-2012
		EP 2467915 A2	27-06-2012
		US 2012205139 A1	16-08-2012
		WO 2011021006 A2	24-02-2011