New Result on Delay-dependent Stability for Markovian Jump Time-delay Systems With Partial Information on Transition Probabilities

Yan Zhang, Ke Lou, and Yuan Ge

***Abstract*—This paper focuses on the delay-dependent stability for a kind of Markovian jump time-delay systems (MJTDSs), whose transition rates are incompletely known. In order to reduce the computational complexity and achieve better performance, auxiliary function-based double integral inequality is combined with extended Wirtinger's inequality and Jensen inequality to deal with the double integral and the triple integral in augmented Lyapunov-Krasovskii function (ALKF) and their weak infinitesimal generator respectively, the more accurate approximation bounds with a fewer variables are derived. As a result, less conservative stability criteria are proposed in this paper. Finally, numerical examples are given to show the effectiveness and the merits of the proposed method.**

***Index Terms*—Auxiliary function-based double integral inequality, delay-dependent stability, Markovian jump time-delay systems (MJTDSs), unknown transition rates.**

I. Introduction

MARKOVIAN jump systems (MJSs) play an important role in hybrid systems because they are able to more accurately reflect the dynamic behavior in various stages of development than a single system, such as different elasticity of demand in power system, the flight-attitude-adjustment in flight control system, maneuvering target tracking [1], random variation in network environment and so on.

Taking into account that the transition probabilities to form the Markov chain are not exactly known in practice, Zhang *et al.* proposed the concept of partly unknown transition probabilities for MJSs in [2], thereafter MJSs with partly unknown transition probabilities have attracted much attention. For example, references [2]−[4] investigated how to separate the unknown transition probabilities or transition rates, and fixed-connection weighting matrix method and free-connection weighting matrix method were proposed in [2] and [3], respectively. Considering that time delay is a widespread phenomenon, it often causes the bad behavior of MJSs, even worsens the dynamic properties. The stability analysis and controller synthesis problems for Markovian jump time delay systems (MJTDSs) with partly unknown transition probabilities were studied in [5]−[8], and stochastic synchronization for Markovian coupled neural networks with partial information on transition probabilities was discussed in [9] and so on.

In the field of stability analysis based on Lyapunov-Krasovskii stability theorem, innovation of reducing the conservatism includes two aspects: one is how to obtain tight bounds of integral terms in the derivative of the Lyapunov-Krasovskii function (LKF), which is very important, and various methods were proposed in the past years, for instance, Jensen inequality, free-weighting matrix method, reciprocally convex approach, Wirtinger's inequality, Bessel-Legendre (B-L) inequality and so on, the corresponding results were reported in [10]−[14] respectively. The other is how to construct a novel LKF, for example, triple integral terms were introduced in the LKF to obtain the less conservative result, such as in [15]−[17] etc. But this method would increase the number of decision variables. e.g., [15] introduced more than $130n^2$ scalar variables, which means that the computational complexity is truly very large. Hence, investigating the problem of the tradeoff between the conservatism and the computational complexity becomes important. For example, the delay-dependent stability problem of continuous neural networks with a time-varying delay was investigated in [18] considering both conservativeness and computational complexity. Some new integral inequalities were proposed in [19], [20] to decrease the computational complexity. Especially, auxiliary function-based double integral inequality includes Jensen inequality and Wirtinger-Based integral inequality as special cases, and no additional decision variable is introduced when it is used to estimate the upper bounds of double integral terms.

Inspired by auxiliary function-based double integral inequality, an augmented Lyapunov-Krasovskii function (ALKF) including augmented term and triple integral term is constructed in this paper to investigate the stability of MJTDSs. Auxiliary function-based double integral inequality is combined with extended Wirtinger's inequality and Jensen inequality to deal with the double integral and the triple integral of the ALKF and their weak infinitesimal generator, the more accurate approximation bounds with a fewer variables are derived. Consequently, the improved stability criteria are proposed. Three examples are provided to show the effectiveness and

This article has been accepted for publication in a future issue of this journal, but has not been fully edited. Content may change prior to final publication.

This work was supported in part by the National Natural Science Foundation of China (61403001, 61572032), in part by the Natural Science Foundation of Anhui Province of China (1508085QF136) and in part by the Natural Science Foundation of Universities of Anhui Province of China (KJ2016A058). Recomended by Associate Editor Ximing Sun.

Yan Zhang, Ke Lou , and Yuan Ge are with the College of Electrical Engineering, Anhui Key Laboratory of Detection Technology and Energy Saving Devices, Anhui Polytechnic University, Wuhu, Anhui 241000, China (e-mail: yanzhang24@yeah.net; louke1979@163.com;ygetoby@mail.ustc.edu.cn).

Digital Object Identifier 10.1109/JAS.2016.7510229

the merits of our method.

Notation: [7], [10], [21], [22] In this paper, $\mathbb{R}^n$ and $\mathbb{R}^{n\times m}$ denote the n-dimensional Euclidean space and the set of all $n\times m$ real matrices, respectively. The notation $P>0$ $(P\geq 0)$ means that P is real symmetric and positive definite (semi-positive-definite) matrix. The notation ε represents the mathematical expectation, i.e., the expected value of a random variable, which is a terminology in probability theory. $|\cdot|$ denotes the Euclidean norm of a vector. $\mathcal{C}\left([a,b],\mathbb{R}^n\right)$ is a family of continuous functions φ from $[a,b]$ to $\mathbb{R}^n$ with a norm $\|x(t)\|$=sup$_{a\leq s\leq b}|x(s)|$. $\mathcal{C}^2_{\mathbb{F}_t}([-h,\ 0],\mathbb{R}^n)$ is a family of $\mathbb{F}_t$-measurable bounded $\mathcal{C}\left([a,b],\mathbb{R}^n\right)$-valued random variables. $\widehat{e}_i\in\mathbb{R}^{n\times 3n}, e_j\in\mathbb{R}^{n\times 7n}, i=1,2,3, j=1,2,\cdots,7,$ are elementary matrices, i.e., $\widehat{e}_i=\begin{bmatrix}\underbrace{0\cdots 0}_{i-1} I \underbrace{0\cdots 0}_{3-i}\end{bmatrix}, e_j=\begin{bmatrix}\underbrace{0\cdots 0}_{j-1} I \underbrace{0\cdots 0}_{7-j}\end{bmatrix}, i=1,2,3, j=1,2,\cdots,7.$ col=$\{x,y\}$ denotes the column vector of vectors x and y, i.e., col$\{x,y\}=\begin{bmatrix}x\\ y\end{bmatrix}$. For matrix X, Sym$\{X\}=X+X^T$. The symbol $*$ within a matrix represents the symmetric terms of the matrix. Matrices without their dimensions mentioned are assumed to satisfy the requirements of algebraic operations.

II. Problem Formulation

Consider MJSs with time delay described as follows [24]:

$$\dot{x}(t)=A(r_t)x(t)+A_d(r_t)x(t-d(t)) \tag{1}$$

where $x(t)\in\mathbb{R}^n$ is the state vector. $d(t)$ denotes the time-varying delay which satisfies the following constraint conditions

$$0\leq d(t)\leq h,\quad \mu_1\leq\dot{d}(t)\leq\mu_2,\quad \forall t\geq 0. \tag{2}$$

When $t\in[-h,\ 0]$, as the initial condition of $x(t)$, $\phi(t)$ belongs to $\mathcal{C}^2_{\mathbb{F}_t}([-h,\ 0],\mathbb{R}^n)$ and r_t belongs to the finite set $\mathcal{S}=\{1,2,\ldots,\mathcal{N}\}$. For simplicity, the solution $x(t,x_0,r_0)$ of system (1) under the initial condition $x(0)=x_0$ and $r_0\in\mathcal{S}$ is denoted by $x(t)$. $A(r_t)$ and $A_d(r_t)$ are known matrix functions, which depend on a Markov process taking values in the finite set $\mathcal{S}$. The description of transition rate matrix $\Pi=(\pi_{ij})\in\mathbb{R}^{\mathcal{N}\times\mathcal{N}}$ is given as follows

$$Pr\{r_{t+\delta}=j\mid r_t=i\}=\begin{cases}\pi_{ij}\delta+o(\delta), & i\neq j\\ 1+\pi_{ij}\delta+o(\delta), & i=j\end{cases}$$

where $\delta>0, \lim\limits_{\delta\to 0}\dfrac{o(\delta)}{\delta}=0$, and $\pi_{ij}\geq 0$ for $i\neq j$ is the transition rate from mode i at time t to mode j at time $t+\delta$, and $\sum_{\delta=1}^{\mathcal{N}}\pi_{ij}=0$, which means $\pi_{ii}=-\sum_{j=1,i\neq j}^{\mathcal{N}}\pi_{ij}$.

The corresponding transition rate matrix for continuous-time MJSs is defined as

$$\Pi=\begin{bmatrix}\pi_{11} & \pi_{12} & \cdots & ?\\ ? & ? & \cdots & \pi_{2\mathcal{N}}\\ \vdots & \vdots & \ddots & \vdots\\ ? & \pi_{\mathcal{N}2} & \cdots & \pi_{\mathcal{N}\mathcal{N}}\end{bmatrix}. \tag{3}$$

In most cases, the elements of transition rate matrix are not completely known, the description in the form of (3) is much more universal. The symbol "?" in matrix represents the unknown transition rate. For notation clarity, $\forall i\in\mathcal{S}$, the set $U^i=U^i_k\bigcup U^i_{uk}$ with $U^i_k\triangleq\{j:\pi_{ij}$ is known for $j\in\mathcal{S}\}$ and $U^i_{uk}\triangleq\{j:\pi_{ij}$ is unknown for $j\in\mathcal{S}\}$.

Since the solution $\{x(t),t\}$ of (1) is a Markov process, the weak infinitesimal generator operator acting on function V in [23] will be used in next. The definition is

$$\mathcal{L}V(x(t),t,i)=\lim_{\Delta\to 0^+}\frac{\mathcal{E}\{V(x(t+\Delta),t+\Delta,r_{t+\Delta})|x(t),r_t=i\}-V(x(t),t,i)}{\Delta}. \tag{4}$$

In addition, the following definition and lemmas are also used.

Definition 1: The system (1) is said to be globally asymptotically stable in the mean square sense if the following holds

$$\mathcal{E}\left\{\int_0^\infty\|x(t)\|^2dt\,|x_0,r_0\right\}<\infty$$

for every initial condition $x_0\in\mathbb{R}^n$ and $r_0\in\mathcal{S}$.

Lemma 1: [10] (Jensen inequality) For any matrix $R>0$, and an integrable function $\{x(t)|t\in[a,b]\}$, the following inequalities hold:

$$\int_a^b x^T(s)Rx(s)ds\geq\frac{1}{b-a}\left(\int_a^b x(s)\right)^T R\int_a^b x(s)ds \tag{5}$$

$$\int_b^a\int_\theta^b x^T(s)Rx(s)dsd\theta \geq\frac{2}{(b-a)^2}\left(\int_b^a\int_\theta^b x(s)dsd\theta\right)^T R\int_b^a\int_\theta^b x(s)dsd\theta. \tag{6}$$

Lemma 2: [13] (Extended Wirtinger's inequality) For any matrix $R>0$, and all continuous differentiable functions $x(t):[b,a]\to\mathbb{R}^n$, the following inequality holds.

$$\int_b^a x^T(s)Rx(s)ds\geq\frac{1}{(a-b)}\left(\int_b^a x(s)ds\right)^T R\left(\int_b^a x(s)ds\right)+\frac{3}{(a-b)}\Omega_1^TR\Omega_1 \tag{7}$$

$$\int_b^a\dot{x}^T(s)R\dot{x}(s)ds\geq\frac{1}{(a-b)}\left(x(a)-x(b)\right)^TR\left(x(a)-x(b)\right)+\frac{3}{(a-b)}\Omega_2^TR\Omega_2 \tag{8}$$

where

$$\Omega_1=\int_b^a x(s)ds-\frac{2}{a-b}\int_b^a\int_\theta^a x(s)dsd\theta$$

$$\Omega_2=x(a)+x(b)-\frac{2}{a-b}\int_b^a x(s)ds.$$

Lemma 3: [20] (Auxiliary function-based double integral inequality) For any matrix $R>0$, and a differentiable functions $\{x(t)|t\in[b,a]\}$, the following inequality holds:

$$\int_b^a\int_\theta^a\dot{x}^T(s)R\dot{x}(s)dsd\theta\ \geq\ 2\Omega_3^TR\Omega_3+4\Omega_4^TR\Omega_4 \tag{9}$$

where

$$\Omega_3 = x(a) - \frac{1}{a-b}\int_b^a x(s)ds$$
$$\Omega_4 = x(a) + \frac{2}{a-b}\int_b^a x(s)ds - \frac{6}{(a-b)^2}\int_b^a\int_\theta^a x(s)dsd\theta.$$

III. Delay-Dependent Stability Analysis

In this section, the delay-dependent stability problem for MJTDSs with partially unknown transition rates is investigated. And some stability theorems are proposed.

Theorem 1: Given scalar $h > 0$, the system (1) is globally asymptotically stable in the mean square sense if there exist matrices with appropriate dimensions $P_i = P_i^T, W_i = W_i^T$, $Q_1 > 0, Q_2 > 0, R_1 > 0, R_2 > 0$ and $Z > 0$ such that the following LMIs hold for $\dot{d}(t) \in [\mu_1, \mu_2], i \in \mathcal{S}$

$$\begin{aligned}&\begin{bmatrix}\widehat{e}_1\\ h\widehat{e}_2\end{bmatrix}^T P_i \begin{bmatrix}\widehat{e}_1\\ h\widehat{e}_2\end{bmatrix} + \frac{h^3}{4}\widehat{e}_1 Z\widehat{e}_1 + h\widehat{e}_2 Q_2\widehat{e}_2 + 2h^2\widehat{e}_3^T R_1\widehat{e}_3\\ &+3h\left(\widehat{e}_2-2\widehat{e}_3\right)^T Q_2\left(\widehat{e}_2-2\widehat{e}_3\right)+2\left(\widehat{e}_1-\widehat{e}_2\right)^T R_2\left(\widehat{e}_1-\widehat{e}_2\right)\\ &+4\left(\widehat{e}_1+2\widehat{e}_2-6\widehat{e}_3\right)^T R_2\left(\widehat{e}_1+2\widehat{e}_2-6\widehat{e}_3\right)+h^3\widehat{e}_3 Z\widehat{e}_3\\ &-\frac{h^3}{2}Sym\left\{\widehat{e}_1 Z\widehat{e}_3\right\} > 0\end{aligned} \tag{10}$$

$$\begin{aligned}&\mathrm{Sym}\left\{\begin{bmatrix}e_1\\ he_6\end{bmatrix}^T P_i\begin{bmatrix}A_ie_1+A_{di}e_2\\ e_1-e_3\end{bmatrix}\right\}\\ &+\sum_{j\in U_k^i}\pi_{ij}\begin{bmatrix}e_1\\ he_6\end{bmatrix}^T\left(P_j-W_i\right)\begin{bmatrix}e_1\\ he_6\end{bmatrix}\\ &+e_1^T\left(Q_1+Q_2+hR_1\right)e_1-(1-\dot{d}(t))e_2^TQ_1e_2\\ &-e_3^TQ_2e_3-he_6^TR_1e_6-3h\left(e_6-e_7\right)^TR_1\left(e_6-e_7\right)\\ &+\left(A_ie_1+A_{di}e_2\right)^T\left(hR_2+\frac{h^4}{4}Z\right)\left(A_ie_1+A_{di}e_2\right)\\ &-h^2\left(e_1-e_6\right)^TZ\left(e_1-e_6\right)\\ &-2h^2\left(e_1+2e_6-6e_7\right)^TZ\left(e_1+2e_6-6e_7\right)\\ &-\frac{1}{h}\left[\left(e_1-e_2\right)^TR_2\left(e_1-e_2\right)+\left(e_2-e_3\right)^TR_2\left(e_2-e_3\right)\right]\\ &-\frac{3}{h}\left(e_1+e_2-2e_4\right)^TR_2\left(e_1+e_2-2e_4\right)\\ &-\frac{3}{h}\left(e_2+e_3-2e_5\right)^TR_2\left(e_2+e_3-2e_5\right)<0\end{aligned} \tag{11}$$

$$P_j - W_i \geq 0, \quad j \in U_{uk}^i; j \neq i \tag{12}$$
$$P_j - W_i \geq 0, \quad j \in U_{uk}^i; j = i. \tag{13}$$

Proof: Construct an ALKF candidate as

$$\begin{aligned}V(t) =& \eta^T(t)P(r_t)\eta(t)+\int_{t-d(t)}^t x^T(s)Q_1x(s)ds\\ &+\int_{t-h}^t x^T(s)Q_2x(s)ds+\int_{t-h}^t\int_\theta^t x^T(s)R_1x(s)dsd\theta\\ &+\int_{t-h}^t\int_\theta^t \dot{x}^T(s)R_2\dot{x}(s)dsd\theta\\ &+\frac{h^2}{2}\int_{t-h}^t\int_\theta^t\int_s^t \dot{x}^T(v)Z\dot{x}(v)dvdsd\theta\end{aligned} \tag{14}$$

where $\eta(t) = \mathrm{col}\left\{x(t), \int_{t-h}^t x(s)ds\right\}$, $P(r_t) \in \mathbb{R}^{2n\times 2n}$ are real symmetric matrices, $r_t \in \mathcal{S}$. Q_1, Q_2, R_1, R_2 and Z are symmetric-positive-definite matrices, which belong to $\mathbb{R}^{n\times n}$ and to be determined.

When $r_t = i \in \mathcal{S}$, matrix $P(r_t)$ is re-expressed as P_i, it is noted that the matrix P_i is only symmetric matrix. Compared with P_i satisfying the condition $P_i > 0$, the constraint in this paper is weakened. For this case, LKF (14) is not a positive function. So the course of the proof is divided into the following two steps based on Lyapunov-Krasovskii stability theorem [21].

Step 1: Find conditions to guarantee the positiveness of the ALKF (14).

Applying Lemmas 1, 2 and 3 to value the lower bound of the integral terms in the ALKF respectively, the following inequalities hold:

$$\begin{aligned}&\int_{t-h}^t x^T(s)Q_2x(s)ds\\ &\geq\frac{1}{h}\left(\int_{t-h}^t x(s)ds\right)^TQ_2\int_{t-h}^t x(s)ds\\ &\quad+\frac{3}{h}\left(\int_{t-h}^t x(s)ds-\frac{2}{h}\int_{t-h}^t\int_\theta^t x(s)dsd\theta\right)^TQ_2\\ &\quad\times\int_{t-h}^t x(s)ds-\frac{2}{h}\int_{t-h}^t\int_\theta^t x(s)dsd\theta\end{aligned} \tag{15}$$

$$\begin{aligned}&\int_{t-h}^t\int_\theta^t x^T(s)R_1x(s)dsd\theta\\ &\geq\frac{2}{h^2}\left(\int_{t-h}^t\int_\theta^t x(s)dsd\theta\right)^TR_1\int_{t-h}^t\int_\theta^t x(s)dsd\theta\end{aligned} \tag{16}$$

$$\begin{aligned}&\frac{h^2}{2}\int_{t-h}^t\int_\theta^t\int_s^t\dot{x}^T(v)Z\dot{x}(v)dvdsd\theta\\ &\geq\frac{h^2}{2}\int_{t-h}^t\int_\theta^t\frac{1}{t-s}\left[x(t)-x(s)\right]^TZ\left[x(t)-x(s)\right]dsd\theta\\ &\geq\frac{h}{2}\int_{t-h}^t\int_\theta^t x^T(t)Zx(t)dsd\theta-hx^T(t)Z\int_{t-h}^t\int_\theta^t x(t)dsd\theta\\ &\quad+\frac{h}{2}\int_{t-h}^t\int_\theta^t x^T(s)Zx(s)dsd\theta.\\ &\geq\frac{h^3}{4}x^T(t)Zx(t)-hx^T(t)Z\int_{t-h}^t\int_\theta^t x(t)dsd\theta\\ &\quad+\frac{1}{h}\left(\int_{t-h}^t\int_\theta^t x(t)dsd\theta\right)^TZ\int_{t-h}^t\int_\theta^t x(t)dsd\theta\end{aligned} \tag{17}$$

$$\int_{t-h}^t\int_\theta^t\dot{x}^T(s)R_2\dot{x}(s)dsd\theta\geq 2\Upsilon_1^TR_2\Upsilon_1+4\Upsilon_2^TR_2\Upsilon_2 \tag{18}$$

where

$$\Upsilon_1 = x(t) - \frac{1}{h}\int_{t-h}^t x(s)ds$$
$$\Upsilon_2 = x(t) + \frac{2}{h}\int_{t-h}^t x(s)ds - \frac{6}{h^2}\int_{t-h}^t\int_\theta^t x(s)dsd\theta.$$

Setting $\zeta(t)=\mathrm{col}\left\{x(t), \frac{1}{h}\int_{t-h}^t x(s)ds, \frac{1}{h^2}\int_{t-h}^t\int_\theta^t x(s)dsd\theta\right\}$ then

$$\eta(t) = \begin{bmatrix}\widehat{e}_1\\ h\widehat{e}_2\end{bmatrix}\zeta(t).$$

Combining (15)−(18) with (14), the lower bound of $V(t)$ can be derived as follows:

$$\begin{aligned}V(t) \geq \zeta^T(t)\Bigg[&\begin{bmatrix}\widehat{e}_1\\ h\widehat{e}_2\end{bmatrix}^T P_i \begin{bmatrix}\widehat{e}_1\\ h\widehat{e}_2\end{bmatrix} + h\widehat{e}_2 Q_2 \widehat{e}_2\\ &+3h\left(\widehat{e}_2-2\widehat{e}_3\right)^T Q_2\left(\widehat{e}_2-2\widehat{e}_3\right)\\ &+2h^2\widehat{e}_3^T R_1\widehat{e}_3 + 2\left(\widehat{e}_1-\widehat{e}_2\right)^T R_2\left(\widehat{e}_1-\widehat{e}_2\right)\\ &+4\left(\widehat{e}_1+2\widehat{e}_2-6\widehat{e}_3\right)^T R_2\left(\widehat{e}_1+2\widehat{e}_2-6\widehat{e}_3\right)\\ &+\frac{h^3}{4}\widehat{e}_1 Z\widehat{e}_1 - \frac{h^3}{2}Sym\left\{\widehat{e}_1 Z\widehat{e}_3\right\} + h^3\widehat{e}_3 Z\widehat{e}_3\Bigg]\zeta(t)\\ &+\int_{t-d(t)}^{t} x^T(s)Q_1x(s)ds. \end{aligned} \tag{19}$$

Note that $Q_1 > 0$, so LMI (10) ensures that $V(t) > 0$.

Step 2: Derive conditions to ensure the negativeness of weak infinitesimal generator of the ALKF (14).

Since the solution of $\{x(t), t\}$ of MJTDSs is a Markov process, the weak infinitesimal generator acting on function $V(t)$ is

$$\begin{aligned}\mathcal{L}V(t) = &2\eta^T(t)P_i\dot{\eta}(t) + \sum_{j=1}^{\mathcal{N}}\pi_{ij}\eta^T(t)P_j\eta(t)\\ &+x^T(t)Q_1x(t) - (1-\dot{d}(t))x^T(t-d(t))Q_1x(t-d(t))\\ &+x^T(t)Q_2x(t) - x^T(t-h)Q_2x(t-h)\\ &+hx^T(t)R_1x(t) - \int_{t-h}^{t} x^T(s)R_1x(s)ds\\ &+h\dot{x}^T(t)R_2\dot{x}(t) - \int_{t-h}^{t}\dot{x}^T(s)R_2\dot{x}(s)ds\\ &+\frac{h^4}{4}\dot{x}^T(t)Z\dot{x}(t) - \frac{h^2}{2}\int_{t-h}^{t}\int_{\theta}^{t}\dot{x}^T(s)Z\dot{x}(s)dsd\theta. \end{aligned} \tag{20}$$

Using Lemmas (2) and (3), the following inequalities hold:

$$\begin{aligned}&-\int_{t-h}^{t} x^T(s)R_1x(s)ds\\ &\quad\leq -\frac{1}{h}\left(\int_{t-h}^{t}x(s)ds\right)^T R_1\int_{t-h}^{t}x(s)ds - \frac{3}{h}\Upsilon_3^T R_1\Upsilon_3 \end{aligned} \tag{21}$$

$$\begin{aligned}&-\int_{t-d(t)}^{t}\dot{x}^T(s)R_2\dot{x}(s)ds\\ &\quad\leq -\frac{1}{d(t)}\left[x(t)-x(t-d(t))\right]^T R_2\left[x(t)-x(t-d(t))\right]\\ &\qquad -\frac{3}{d(t)}\Upsilon_4^T R_2\Upsilon_4 \end{aligned} \tag{22}$$

$$\begin{aligned}&-\int_{t-h}^{t-d(t)}\dot{x}^T(s)R_2\dot{x}(s)ds\\ &\quad\leq -\frac{1}{h-d(t)}\left[x(t-d(t))-x(t-h)\right]^T R_2\\ &\qquad\times\left[x(t-d(t))-x(t-h)\right] - \frac{3}{h-d(t)}\Upsilon_5^T R_2\Upsilon_5 \end{aligned} \tag{23}$$

$$\begin{aligned}&-\frac{h^2}{2}\int_{t-h}^{t}\int_{\theta}^{t}\dot{x}^T(s)Z\dot{x}(s)dsd\theta\\ &\quad\leq -h^2\left[x(t)-\frac{1}{h}\int_{t-h}^{t}x(s)ds\right]^T Z\left[x(t)-\frac{1}{h}\int_{t-h}^{t}x(s)ds\right]\\ &\qquad -2h^2\Upsilon_6^T Z\Upsilon_6 \end{aligned} \tag{24}$$

where

$$\begin{aligned}\Upsilon_3 &= \int_{t-h}^{t}x(s)ds - \frac{2}{h}\int_{t-h}^{t}\int_{\theta}^{t}x(s)dsd\theta\\ \Upsilon_4 &= x(t)+x(t-d(t)) - \frac{2}{d(t)}\int_{t-d(t)}^{t}x(s)ds\\ \Upsilon_5 &= x(t-d(t))+x(t-h) - \frac{2}{h-d(t)}\int_{t-h}^{t-d(t)}x(s)ds\\ \Upsilon_6 &= x(t)+\frac{2}{h}\int_{t-h}^{t}x(s)ds - \frac{6}{h^2}\int_{t-h}^{t}\int_{\theta}^{t}x(s)dsd\theta. \end{aligned}$$

On the other hand, the transition rates cannot be completely known, the following equations hold via introducing the free-connection weighting matrices $W_i = W_i^T \in \mathbb{R}^{2n\times 2n}, i \in \mathcal{S}$:

$$0 = -\eta^T(t)\sum_{j=1}^{\mathcal{N}}\pi_{ij}W_i\eta(t). \tag{25}$$

Setting $\xi(t) = \mathrm{col}\Big\{x(t), x(t-d(t)), x(t-h), \frac{1}{d(t)}\int_{t-d(t)}^{t}x(s)ds, \frac{1}{h-d(t)}\int_{t-h}^{t-d(t)}x(s)ds, \frac{1}{h}\int_{t-h}^{t}x(s)ds, \frac{1}{h^2}\int_{t-h}^{t}\int_{\theta}^{t}x(s)dsd\theta\Big\}$ and combining (21)−(25) with (20), it yields

$$\begin{aligned}\mathcal{L}V(t) \leq \xi^T(t)\Bigg\{&\mathrm{Sym}\left\{\begin{bmatrix}e_1\\ he_6\end{bmatrix}^T P_i\begin{bmatrix}A_ie_1+A_{di}e_2\\ e_1-e_3\end{bmatrix}\right\}\\ &+\sum_{j\in U_k^i}\pi_{ij}\begin{bmatrix}e_1\\ he_6\end{bmatrix}^T(P_j-W_i)\begin{bmatrix}e_1\\ he_6\end{bmatrix}\\ &+e_1^T\left(Q_1+Q_2+hR_1\right)e_1 - (1-\dot{d}(t))e_2^TQ_1e_2\\ &-e_3^TQ_2e_3 - he_6^TR_1e_6 - 3h\left(e_6-e_7\right)^T R_1\left(e_6-e_7\right)\\ &+\left(A_ie_1+A_{di}e_2\right)^T\left(hR_2+\frac{h^4}{4}Z\right)\left(A_ie_1+A_{di}e_2\right)\\ &-h^2\left(e_1-e_6\right)^T Z\left(e_1-e_6\right)\\ &-2h^2\left(e_1+2e_6-6e_7\right)^T Z\left(e_1+2e_6-6e_7\right)\\ &-\frac{1}{h}\left[\left(e_1-e_2\right)^T R_2\left(e_1-e_2\right)+\left(e_2-e_3\right)^T R_2\left(e_2-e_3\right)\right]\\ &-\frac{3}{h}\left(e_1+e_2-2e_4\right)^T R_2\left(e_1+e_2-2e_4\right)\\ &-\frac{3}{h}\left(e_2+e_3-2e_5\right)^T R_2\left(e_2+e_3-2e_5\right)\Bigg\}\xi(t)\\ &+\sum_{j\in U_{uk}^i}\pi_{ij}\begin{bmatrix}e_1\\ he_6\end{bmatrix}^T(P_j-W_i)\begin{bmatrix}e_1\\ he_6\end{bmatrix}. \end{aligned} \tag{26}$$

Due to $\pi_{ij} \geq 0, j \neq i$ and $\pi_{ij} \leq 0, j = i$, hence (11)−(13) can guarantee the negativeness of weak infinitesimal generator of the ALKF (14). Therefore, the trivial solution of the MJTDSs (1) is asymptotically stable in the mean square sense. The proof is completed. ■

Remark 1: To reduce the computational complexity and achieve better performance, auxiliary function-based double integral inequality is combined with extended Wirtinger's inequality and Jensen inequality to estimate the lower bound of the ALKF, the constraint conditions of matrices $P_i, i \in \mathcal{S}$ are weakened. At the same time, the above three inequalities are used to estimate the upper bound of weak infinitesimal generator of the ALKF, as a result, the more accurate approximation bounds with a fewer variables are derived.

Remark 2: Compared with [24], the positive-definite matrices $Q_1(r_t)$ and $Q_2(r_t)$ are replaced with Q_1 and Q_2, respectively. Although this treatment could result in conservative criterion, it could greatly reduce the computational complexity from the introduction of the variables. For the same reason, the time delay, $d(t)$, and the difference between h and $d(t)$, $h-d(t)$, are enlarged as h (23) and (24), respectively. As is known, reciprocally convex approach in [12] and the extended vector inequality in [25] can deal with this case, but the variables will be introduced in large quantities, which also increase the computational complexity.

If the information of transition probabilities is known completely, the following Corollary can be derived based on Theorem 1.

Corollary 1: Given scalar $h>0$, the system (1) is globally asymptotically stable in the mean square sense if there exist matrices with appropriate dimensions $P_i=P_i^T, Q_1>0, Q_2>0, R_1>0, R_2>0$ and $Z>0$ such that the following LMIs hold for $\dot{d}(t)\in[\mu_1,\mu_2], i\in\mathcal{S}$

$$\begin{aligned}&\begin{bmatrix}\widehat{e}_1\\ h\widehat{e}_2\end{bmatrix}^T P_i\begin{bmatrix}\widehat{e}_1\\ h\widehat{e}_2\end{bmatrix}+\frac{h^3}{4}\widehat{e}_1Z\widehat{e}_1+h\widehat{e}_2Q_2\widehat{e}_2+2h^2\widehat{e}_3^TR_1\widehat{e}_3\\&+3h\left(\widehat{e}_2-2\widehat{e}_3\right)^TQ_2\left(\widehat{e}_2-2\widehat{e}_3\right)+2\left(\widehat{e}_1-\widehat{e}_2\right)^TR_2\left(\widehat{e}_1-\widehat{e}_2\right)\\&+4\left(\widehat{e}_1+2\widehat{e}_2-6\widehat{e}_3\right)^TR_2\left(\widehat{e}_1+2\widehat{e}_2-6\widehat{e}_3\right)+h^3\widehat{e}_3Z\widehat{e}_3\\&-\frac{h^3}{2}\mathtt{Sym}\left\{\widehat{e}_1Z\widehat{e}_3\right\}>0\end{aligned}\tag{27}$$

$$\begin{aligned}&\mathtt{Sym}\left\{\begin{bmatrix}e_1\\ he_6\end{bmatrix}^TP_i\begin{bmatrix}A_ie_1+A_{di}e_2\\ e_1-e_3\end{bmatrix}\right\}+\sum_{j=1}^{\mathcal{N}}\pi_{ij}\begin{bmatrix}e_1\\ he_6\end{bmatrix}^TP_j\begin{bmatrix}e_1\\ he_6\end{bmatrix}\\&+e_1^T\left(Q_1+Q_2+hR_1\right)e_1-(1-\dot{d}(t))e_2^TQ_1e_2\\&-e_3^TQ_2e_3-he_6^TR_1e_6-3h\left(e_6-e_7\right)^TR_1\left(e_6-e_7\right)\\&+\left(A_ie_1+A_{di}e_2\right)^T\left(hR_2+\frac{h^4}{4}Z\right)\left(A_ie_1+A_{di}e_2\right)\\&-h^2\left(e_1-e_6\right)^TZ\left(e_1-e_6\right)\\&-2h^2\left(e_1+2e_6-6e_7\right)^TZ\left(e_1+2e_6-6e_7\right)\\&-\frac{1}{h}\left[\left(e_1-e_2\right)^TR_2\left(e_1-e_2\right)+\left(e_2-e_3\right)^TR_2\left(e_2-e_3\right)\right]\\&-\frac{3}{h}\left(e_1+e_2-2e_4\right)^TR_2\left(e_1+e_2-2e_4\right)\\&-\frac{3}{h}\left(e_2+e_3-2e_5\right)^TR_2\left(e_2+e_3-2e_5\right)<0.\end{aligned}\tag{28}$$

IV. Numerical Examples

In this section, two numerical examples are given to prove the effectiveness and the merits of the criterion presented in this paper.

Example 1: [24] Consider the MJSs (1) with four modes, whose state matrices are

$$A_1=\begin{bmatrix}-1.7460 & -1.4410\\ -1.5937 & -2.4289\end{bmatrix},\quad A_2=\begin{bmatrix}-1.3999 & 0.8156\\ -0.6900 & -0.2881\end{bmatrix}$$

$$A_3=\begin{bmatrix}-0.2523 & 0.7500\\ 1.5630 & -1.8540\end{bmatrix},\quad A_4=\begin{bmatrix}-1.2840 & 0.3640\\ 1.3670 & -1.0640\end{bmatrix}$$

$$A_{d1}=\begin{bmatrix}-0.5 & -0.5\\ 0.05 & 0.01\end{bmatrix},\qquad A_{d2}=\begin{bmatrix}0.01 & 0\\ 0.05 & -0.01\end{bmatrix}$$

$$A_{d3}=\begin{bmatrix}-0.01 & -0.02\\ 0.05 & 0.01\end{bmatrix},\quad A_{d4}=\begin{bmatrix}0.03 & 0.01\\ -0.2 & -0.1\end{bmatrix}.$$

The transition rate matrix Π is

$$\Pi=\begin{bmatrix}-1.3 & 0.2 & ? & ?\\ ? & ? & 0.3 & 0.3\\ ? & ? & -1.5 & ?\\ ? & ? & ? & -1.2\end{bmatrix}.$$

The corresponding upper bounds of time-varying delay for various μ are listed in Table I, which shows that Theorem 1 indeed ameliorate the allowable upper bound h. Table II provides numbers of scalar variables for different methods to further illustrate the merit of our method.

TABLE I
Allowable Upper Bounds h for Various μ

Methods	$\mu=0$	$\mu=0.2$	$\mu=0.5$	$\mu\geq 1$
Theorem 1 in [24]	1.4931	1.4926	1.4926	1.4926
Theorem 1 in this paper	1.8436	1.6908	1.5272	1.4980

TABLE II
Numbers of Scalar Variables for Different Methods

Methods	Numbers of scalar variables
Theorem 1 in [24]	$\left(6.5n^2+2.5n\right)\mathcal{N}+n^2+n$
Theorem 1 in this paper	$\left(4n^2+2n\right)\mathcal{N}+2.5n^2+2.5n$

Because $\mathcal{N},n\in\mathbb{N}$, $\left(6.5n^2+2.5n\right)\mathcal{N}+n^2+n$ is much larger than $\left(4n^2+2n\right)\mathcal{N}+2.5n^2+2.5n$ unless $\mathcal{N}=n=1$, so our method greatly reduces the computational complexity.

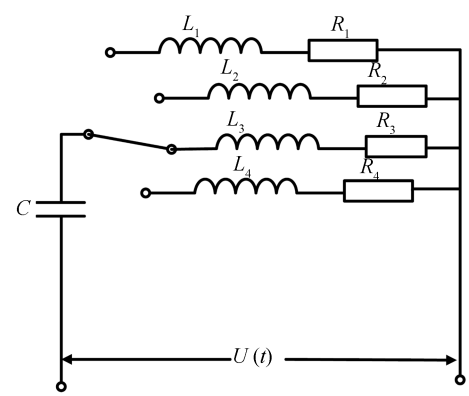

Fig. 1. RLC series circuit.

Example 2: (A similar example can be found in reference [7]) Consider the RLC series circuit (Fig. 1), open-loop system can be established as the MJSs (1) taking into account the time-varying delay, where $x(t)=\begin{bmatrix}x_1(t)\\ x_2(t)\end{bmatrix}$ with $x_1(t)=i_L(t), x_2(t)=U_C(t)$, states parameters are obtained as follows based on Kirchhoff's law:

$$A_i=\begin{bmatrix}-\frac{R_i}{L_i} & -\frac{1}{L_i}\\ \frac{1}{C} & 0\end{bmatrix},\qquad i=1,2,3,4$$

with $R_1 = 0.61\Omega, R_2 = 0.02\Omega, R_3 = 0.62\Omega, R_4 = 0.06\Omega, L_1 = 1mH, L_2 = 2mH, L_3 = 4.58mH, L_4 = 2.58mH, C = 1.3mF$. And other parameters are

$$A_{d1} = \begin{bmatrix} -0.05 & -0.05 \\ 0.05 & 0.01 \end{bmatrix}, \quad A_{d2} = \begin{bmatrix} 0.01 & 0 \\ 0.05 & -0.01 \end{bmatrix}$$
$$A_{d3} = \begin{bmatrix} -0.01 & -0.02 \\ 0.05 & 0.01 \end{bmatrix}, \quad A_{d4} = \begin{bmatrix} 0.03 & 0.01 \\ -0.02 & -0.1 \end{bmatrix}.$$

The transition rate matrix Π is described in Example 1. Applying Theorem 1, the corresponding upper bounds of time-varying delay for various μ are obtained and listed in Table III.

TABLE III
ALLOWABLE UPPER BOUNDS h FOR VARIOUS μ

$\mu = 0$	$\mu = 0.2$	$\mu = 0.5$	$\mu \geq 1$
0.8216	0.8148	0.8089	0.8089

Furthermore, simulation results under an initial condition $x_0 = [-0.8 \;\; 0.2]^T$ and time-varying delay $d(t) = 0.8\sin^2(t) + 0.0089$ are shown in Fig. 2. To make the example more persuasive, the state response with 1000 random samples (Fig. 3) is provided in this example, which demonstrates the stability of this system.

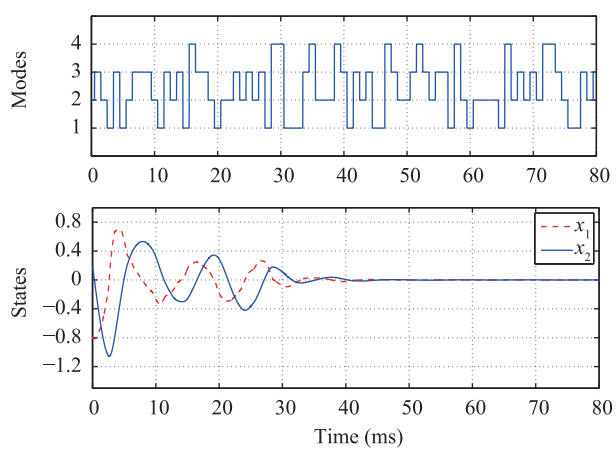

Fig. 2. State responses with switching modes.

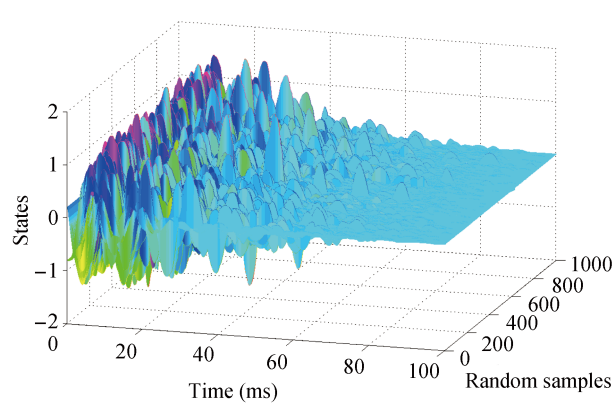

Fig. 3. State response with 1000 random samples.

Example 3: Consider the MJSs (1) with two modes, whose state matrices are given in [26].

$$A_1 = \begin{bmatrix} -3.4888 & 0.8057 \\ -0.6451 & -3.2684 \end{bmatrix}, \quad A_{d1} = \begin{bmatrix} -0.8620 & -1.2919 \\ -0.6841 & -2.0729 \end{bmatrix}$$
$$A_2 = \begin{bmatrix} -2.4898 & 0.2895 \\ 1.3396 & -0.0211 \end{bmatrix}, \quad A_{d2} = \begin{bmatrix} -2.8306 & 0.4978 \\ -0.8436 & -1.0115 \end{bmatrix}.$$

The transition rate matrix Π is considered as

$$\Pi = \begin{bmatrix} -0.1 & 0.1 \\ 0.8 & -0.8 \end{bmatrix}.$$

The maximal allowable upper bounds h for different μ are obtained by applying the Theorem 1 in [26] and Corollary 1 in this paper, which are listed in Table IV. This table shows the merit of our method again.

TABLE IV
THE MAXIMAL ALLOWABLE UPPER BOUND h FOR DIFFERENT μ

Methods	μ=0.6	μ=0.8	μ=1.6	Numbers of scalar variables
Theorem 1 in [26]	0.5159	0.4814	0.4789	$(2n^2+2n)\mathcal{N}+2.5n^2+2.5n$
Corollary 1 in this paper	0.5870	0.5200	0.4925	$(2n^2+n)\mathcal{N}+2.5n^2+2.5n$

V. CONCLUSION

By combining auxiliary function-based double integral with extended Wirtinger's inequality and Jensen inequality, the conditions to ensure the positiveness of ALKF are weakened and much tighter bound of double integral terms is estimated in the weak infinitesimal generator of the ALKF. At the same time, free-connection weighting matrix method is used to separate the unknown transition rates. Consequently, the new results on delay-dependent stability for MJTDSs are obtained in this paper. Compared with previous criteria, our results require fewer scalar variables and have less conservative. Numerical examples illustrate this point.

Notwithstanding our results have less conservative at present. As we say in Remark 2, $d(t)$ and $h - d(t)$ are enlarged as h, the results of such processing give rise to conservatism. Therefore, how to find a compromise formula between computational complexity and conservatism is our next work.

REFERENCES

[1] E. Mazor, A. Averbuch, Y. Bar-Shalom, and J. Dayan, "Interacting multiple model methods in target tracking: A survey," *IEEE Trans. Aerosp. Electron. Syst.*, vol. 34, no. 1, pp. 103−123, Jan. 1998.

[2] L. X. Zhang and E. K. Boukas, "Stability and stabilization of Markovian jump linear systems with partly unknown transition probabilities," *Automatica*, vol. 45, no. 2, pp. 463−468, Feb. 2009.

[3] Y. Zhang, Y. He, M. Wu, and J. Zhang, "Stabilization for Markovian jump systems with partial information on transition probability based on free-connection weighting matrices," *Automatica*, vol. 47, no. 1, pp. 79−84, Jan. 2011.

[4] Y. Zhang, Y. He, M. Wu, and J. Zhang, "H_∞ control for discrete-time Markovian jump systems with partial information on transition probabilities," *Asian J. Control*, vol. 15, no. 5, pp. 1397−1406, Sep. 2013.

[5] B. Z. Du, J. Lam, Y. Zou, and Z. Shu, "Stability and stabilization for Markovian jump time-delay systems with partially unknown transition rates," *IEEE Trans. Circuits Syst. I-Reg. Papers*, vol. 60, no. 2, pp. 341−351, Feb. 2013.

[6] J. Cheng, H. Zhu, S. M. Zhong, Y. P. Zhang, and Y. Y. Li, "Finite-time H_∞ control for a class of discrete-time Markovian jump systems with partly unknown time-varying transition probabilities subject to average dwell time switching," *Int. J. Syst. Sci.*, vol. 46, no. 6, pp. 1080−1093, Apr. 2015.

[7] J. J. Zhao, J. Wang, J. H. Park, and H. Shen, "Memory feedback controller design for stochastic Markov jump distributed delay systems with input saturation and partially known transition rates," *Nonlin. Anal.: Hybrid Syst.*, vol. 15, pp. 52−62, Feb. 2015.

[8] M. Q. Shen and G. H. Yang, "H_2 state feedback controller design for continuous Markov jump linear systems with partly known information," *Int. J. Syst. Sci.*, vol. 43, no. 4, pp. 786−796, Jan. 2012.

[9] J. Y. Wang, H. G. Zhang, Z. S. Wang, and H. J. Liang, "Stochastic synchronization for Markovian coupled neural networks with partial information on transition probabilities," *Neurocomputing*, vol. 149, pp. 983−992, Feb. 2015.

[10] K. Q. Gu, V. L. Kharitonov, and J. Chen, *Stability of Time-Delay Systems*. Boston: Birkhäuser, 2003.

[11] Y. He, Q. G. Wang, C. Lin, and M. Wu, "Delay-range-dependent stability for systems with time-varying delay," *Automatica*, vol. 43, no. 2, pp. 371−376, Feb. 2007.

[12] P. G. Park, J. W. Ko, and C. K. Jeong, "Reciprocally convex approach to stability of systems with time-varying delays," *Automatica*, vol. 47, no. 1, pp. 235−238, Jan. 2011.

[13] A. Seuret and F. Gouaisbaut, "Wirtinger-based integral inequality: Application to time-delay systems," *Automatica*, vol. 49, no. 9, pp. 2860−2866, Sep. 2013.

[14] A. Seuret and F. Gouaisbaut, "Complete quadratic Lyapunov functionals using Bessel-Legendre inequality," in *2014 European Control Conf.*, Strasbourg, 2014, pp. 448−453.

[15] J. Sun, G. P. Liu, J. Chen, and D. Rees. "Improved stability criteria for linear systems with time-varying delay," *IET Control Theor. Appl.*, vol. 4, no. 4, pp. 683−689, Apr. 2010.

[16] A. Chandrasekar, R. Rakkiyappan, F. A. Rihan, and S. Lakshmanan, "Exponential synchronization of Markovian jumping neural networks with partly unknown transition probabilities via stochastic sampled-data control," *Neurocomputing*, vol. 133, pp. 385−398, Jun. 2014.

[17] Z. C. Li, Y. Bai, and T. Q. Li, "Improved stability and stabilization design for networked control systems using new quadruple-integral functionals," *ISA Trans.*, to be published.

[18] C. K. Zhang, Y. He, L. Jiang, and M. Wu, "Stability analysis for delayed neural networks considering both conservativeness and complexity," *IEEE Trans. Neural Netw. Learn. Syst.*, vol. 27, no. 7, pp. 1486−1501, Jul. 2016.

[19] C. K. Zhang, Y. He, L. Jiang, M. Wu, and H. B. Zeng, "Stability analysis of systems with time-varying delay via relaxed integral inequalities," *Syst. Control Lett.*, vol. 92, pp. 52−61, Jun. 2016.

[20] P. G. Park, W. Lee, and S. Y. Lee, "Auxiliary function-based integral inequalities for quadratic functions and their applications to time-delay systems," *J. Franklin Inst.*, vol. 352, no. 4, pp. 1378−1396, Apr. 2015.

[21] M. Wu, Y. He, and J. H. She, *Stability Analysis and Robust Control of Time-Delay Systems*. Berlin Heidelberg: Springer-Verlag, 2010.

[22] X. R. Mao, *Stochastic Differential Equations and Applications* (Second Edition). Chichester: Horwood Publishing Limited, 2007.

[23] H. J. Kushner, *Stochastic Stability and Control*. New York: Academic Press, 1967.

[24] Y. Zhang, Y. He, M. Wu, and J. Zhang, "State estimation for Markovian jump systems with time-varying delay and partial information on transition probabilities," *IET Control Theor. Appl.*, vol. 6, no. 16, pp. 2549−2555, Nov. 2012.

[25] X. M. Zhang and Q. L. Han, "Event-based H_∞ filtering for sampled-data systems," *Automatica*, vol. 51, pp. 55−69, Jan. 2015.

[26] X. D. Zhao and Q. S. Zeng, "Delay-dependent stability analysis for Markovian jump systems with interval time-varying-delays," *Int. J. Automat. Comput.*, vol. 7, no. 2, pp. 224−229, May 2010.

Yan Zhang received her B. S. degree in applied mathematics from Luoyang Normal University in 2006 and the Ph. D degree in control theory and control engineering from Central South University in 2012. She received the outstanding doctoral dissertation award of Hunan Province of China in 2014. She is currently a lecturer in the College of Electrical Engineering at Anhui Polytechnic University.

Her current research interests include stochastic control and robust control. Corresponding author of this paper.

Ke Lou received his B. S. degree in computer science and application from Anhui University of technology in 2000 and M. S., Ph. D. degrees in control theory and control engineering from Jiangnan University in 2003 and 2014. He is currently an associate professor in the College of Electrical Engineering at Anhui Polytechnic University.

His research interests include flocking control and networked control systems.

Yuan Ge received his B. S, M. S. and Ph. D. degrees in control theory and control engineering from University of Science and Technology of China in 2002, 2005 and 2011, respectively. He is currently a professor in the College of Electrical Engineering at Anhui Polytechnic University.

His research interests include networked control systems, tele-robotic systems and optimal control.