Financially Optimal Solar Power Sizing and Positioning in a Power Grid

Ozcel Cangul, Roberto Rocchetta, Dr. Edoardo Patelli
Institute for Risk and Uncertainty
University of Liverpool
Liverpool, UK
Email: epatelli@liverpool.ac.uk

Dr. Murat Fahrioglu
School of Electrical and Electronics Engineering
Middle East Technical University NCC
Kalkanlı, Cyprus

***Abstract*—the integration of renewable energy resources into our lives is vital for achieving a sustainable energy development. Renewable energy generation is undoubtedly an effective alternative for conventional electrical energy generation techniques, which are one of the key contributions for the emission of greenhouse gases. However, the introduction of renewable energy sources into the power grid is associated with significant costs. Here, an optimal localization and sizing of solar photovoltaic power generation plants in a power network are analyzed. Genetic algorithms are used to solve the optimization problem.**

Keywords—genetic algorithm; matpower; optimal; solar; sizing; positioning.

I. Introduction

The aim of this paper is to investigate, analyze and find the optimal localization and sizing of solar photovoltaic (PV) power generation plants in a power network. The main focus of the research is to study the influence of generating solar power on the financial cost of supplying all the loads in the grid. Both intuitively and technically, increasing the amount of solar power generation decreases the total running cost, in $/hr, since operational costs of renewable power stations are much less than those of thermal power plants.

The uncertainty in the environment and the intermittent operational behavior of the renewable energy sources add complexity to the analysis of a power network with solar PV generators hence such cases need an effective uncertainty quantification [1, 2]. Rocchetta et al. have used a Monte Carlo non-sequential algorithm in order to create severe weather conditions and conducted a probabilistic risk assessment for finding the optimal size of distributed generators minimizing both risks and cost due to severe weather [3]. Taliotis et al. have used a cost-optimization tool for analyzing various energy generation methods which are working together to supply the Cyprus grid [4]. In [5], a combination of both probabilistic and possibilistic variables are considered where uncertainties related to the load and renewable energy sources are accounted as probabilistic and the gas turbines and electric vehicles are taken as possibilistic. Mena et al. have used a Monte Carlo simulation optimal power flow (OPF) model for creating different scenarios for uncertainties and analyzed the power grid technically [6].

This research proposes a new definition called "Unit Financial Impact Indicator (UFII)" and the objective of this paper is to show that this novel definition is applicable for investigating and finding the optimal sizing and positioning of solar PV plants in a grid. UFII is a metric derived for quantifying the percent impact of a unit of solar PV plant on the global system cost. The research in this paper aims to find out the maximum UFII, in other words; to obtain the highest benefit from the solar PV plants.

Together with the help of the proposed indicator, Genetic Algorithm (GA) tool of MATLAB is used for finding the optimal sizes of various solar PV power plants on different buses, i.e. the one maximizing the UFII metric. The optimization uses real generation data from an existing solar PV system and a simulation to create a load projection curve. The 14-bus IEEE power grid [7] is employed as representative case study to demonstrate the procedure. In [8], uncertainties due to weather variability and weather induced failures are taken into account within a framework for resilience and reliability assessment of power netroks. In this paper, the GA optimization is run on two scenarios in order to reflect the effect of environmental uncertainty of solar energy; one with the ideal environmental conditions for solar PV generation and another with a cloudy weather where one of the buses is located. The results of the deterministic optimization are useful indications of where to place solar PV power plants, with low running costs, for getting the maximized financial benefit.

978-1-5386-3669-5/18/$31.00 ©2018 IEEE

II. METHODOLOGY

The approach explained in this paper makes it possible to investigate the pros and cons of many solar PV stations placed at different locations and with various capacities. Thus, it becomes possible to find out the optimal distribution of solar PV power plants within the grid. In other words, the higher the UFII value, the shorter the investment payback period, which means financially optimal spending.

A. Unit Financial Impact Indicator

A definition "Unit Financial Impact Indicator (UFII)" is derived in order to formulate mathematically the effect of adding each MWp of solar PV capacity on the whole system. UFII indicates the per cent change in the total running cost of the grid per one unit of solar PV capacity. Firstly, the system running cost, in $/hr, is found by applying optimal power flow. Then, the solar PV plants are allocated and the overall system running cost with solar PV stations is noted. UFII is found by dividing the percent difference the solar PV plants made to the system running cost by the total solar PV capacity added on the original power network.

$$UFII = \frac{\left(\frac{C_o - C_x}{C_o}\right) * 100}{P_T} = \frac{\%\Delta C}{P_T} \tag{1}$$

UFII: Unit financial impact indicator;
C_0: Running cost of the system without any solar PV plant ($/hr);
C_x: Running cost of the system after addition of solar PV plants ($/hr);
P_T: Total solar PV capacity in the system (MW_P).

B. Generation and Load Data

A real 5 kWp capacity solar PV installation located in Cyprus has been tracked for a period of 1 year and the output data of the system have been recorded for every hour slot for 8760 hours. These real generation data are adapted to the size of 1 MWp and the results are taken to be the output for unit solar PV plant. Fig. 1 shows the unit solar PV generation curve obtained from the real generation data on 209th day of the year.

A function is written to create a load curve over a year on an hourly basis, i.e. 8760 slots. In accordance with historical data, the load curve is generated to have two peaks in a day, one at noon and another in the evening. The load curve has an annual distribution such that the summer time overall loads are of the highest value with relatively lower winter time peaks where the energy consumption in the spring and autumn consist of the lowest values in a year. A 24-hour load curve for Bus 3, on 209th day of the year, is shown in Fig. 2.

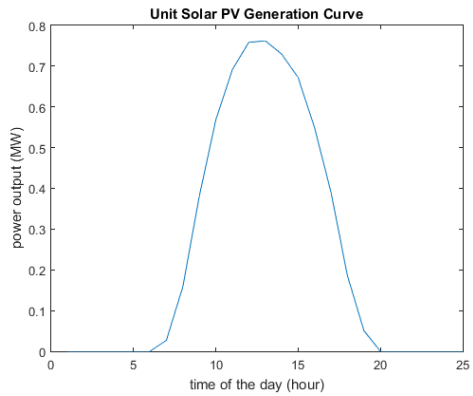

Fig. 1. Unit solar PV generation curve on 209th day of the year.

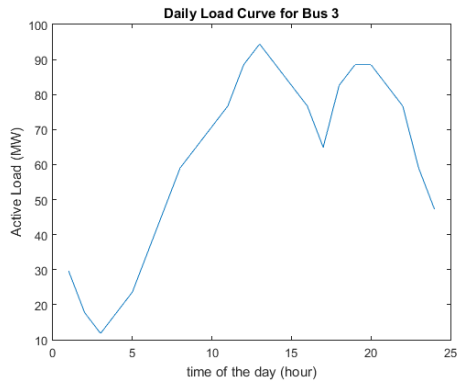

Fig. 2. Daily load curve for Bus 3 on 209th day of the year.

C. Operation & Maintenance Cost of Solar PV Plant

According to Electric Power Research Institute, the operations and maintenance cost of a solar PV power plant is given as $22/kW$_P$ per year [9]. This turns out to be $2.51/hr per year for each MW$_P$ of solar PV capacity. The obvious difference between the generator cost values of thermal and solar PV power stations easily shows that increasing the amount of any renewable energy generation method directly reduces the objective function value of the system.

D. Genetic Algorithm

Genetic Algorithm is an optimization tool based on the natural selection phenomenon of the biological evolution theory [10].

As a beginning, the algorithm starts randomizing an initial population of design variables, i.e. chromosomes. Then, an objective function, i.e. fitness function, is calculated for each chromosome by solving the numerical model. Once the initial population is evaluated and fitness function is computed, the evolutionary procedure starts. At each iteration of the evolutionary process, a set of best performing solutions is

selected according to the user-defined fitness function. Those chromosomes will be the parents of the offspring population of chromosomes, i.e. parents' genes (the values of the design variables) are randomly mixed to generate new children, i.e. crossover. Random changes are also applied on parents to create new offspring chromosomes, i.e. mutation. This is done to add diversity to the population for better exploring the design space and reducing the likelihood of getting stacked at a local minimum. Once offspring population is obtained, the model runs a fitness function evaluation. The iteration of the evolutionary procedure, i.e. generation, is repeated and the algorithm gets closer to the optimal solution, finally reaching the global optimization after enough number of generations. Due to highly nonlinear behavior of the power grid leading to a difficult analytical tractability of the allocation problem, and since there are many possibilities for allocating and sizing solar PV power stations, GA is used for obtaining the optimum results for the sake of minimizing the time consumed for computational work.

M. Sedighizadeh, and A. Rezazadeh used GA for finding the optimum distributed generation allocation to reduce losses and enhance voltage stability and proved GA successful in investigating power networks [11]. This research uses GA for obtaining the investment with maximal efficiency based on UFII, which is calculated as explained in II.A and employed here as fitness function.

Each chromosome contains 14 design variables (number of buses thus the number of solar PV plants in the system) for GA optimization tool is written for sizing and allocating the optimal solar PV power plants by maximizing UFII, i.e. the percentage of the global cost reduction weighted on the solar PV plant investment. The aim is to achieve the highest UFII in order to obtain highest efficiency of the solar plant investment. The upper constraints for the solar PV power plant size for all the buses are set to 50 MW whereas the lower constraints are 0 MW.

E. 14-bus IEEE Power Grid on Matpower

The 14-bus IEEE power grid is investigated as the pilot system in Matpower [12], a Matlab package for running power flow and optimal power flow functions. There are 5 thermal power plants in the original system, each of which has its own technical and financial parameters. The *runopf* (run optimal power flow) function solves the power flow, its objective function value being the total running cost of the whole system represented in \$/hr. In [13], the sum of the quadratic cost model at each generator is given as the objective function of the power system.

$$F(x) = \sum_{i=1}^{n_g} a_i + b_i Pg_i + c_i Pg_i^2 \tag{2}$$

where;

n_g: amount of generation including slack bus,

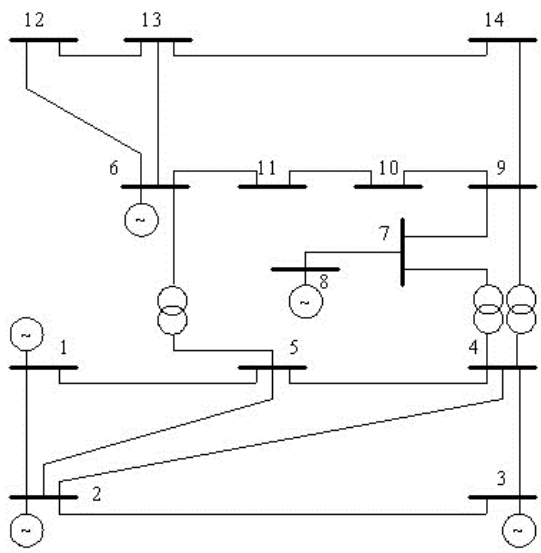

Fig. 3. 14-bus IEEE power grid.

Pg_i: generated active power at bus i,

a_i, b_i *and* c_i: unit cost curve for i^{th} generator.

The objective in OPF is to minimise the value of $F(x)$ subject to:

$h_i(x) = 0,\ i = 1, 2, \ldots, n$ (equality constraints)

$g_i(x) = 0,\ j = 1, 2, \ldots, m$ (inequality constraints)

so,

$$C = minF(x) \tag{3}$$

where;

C: total running cost of the system in \$/hr.

F. GA Optimizations Run

Three different GA optimizations are conducted. Firstly, a solar PV plant is placed on bus 14 only (1 design variable). An optimization is run for finding the optimal plant size assuming the output power is constantly the same all the time. This is done in order to show and explain that varying power generation values result in different UFII values.

As the second step, the 5005th hour of the year is chosen, i.e. 1:00 pm on July 28th. A GA optimization is run and solar PV plants can be installed in all buses (14 design variables) assuming that the environmental conditions are ideal. The generation and load data are obtained as explained earlier in II.B.

Lastly, another GA optimization is run similar to the previos one. However, in this case, a cloudy environment is simulated on Bus 3 in order to show how a change in an

uncertainty parameter affects the outcome of the optimization. The effect of the clouds on the solar PV generation is reflected as dropping the power output of the solar PV plant on Bus 3 to 1/3 of the ideal case.

III. Results

A. *Optimal Solar PV Power Plant Sizing on One Bus Only*

As the first step of the research, the solar PV generation value of only one bus (bus 14) at a time is changed manually and the system optimal power flow is run. The UFII value for different power sizes are calculated manually. Fig. 2 displays the results:

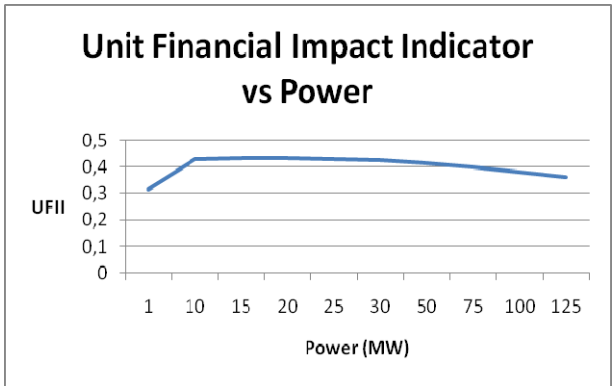

Fig. 4. Unit financial impact indicator vs. Power on bus 14.

It is seen that the UFII value changes according to the solar PV power capacity. Also, it is obvious that there is a peak value when the power is between 10 and 20 MW. This figure proves that the UFII is changing over various solar PV power values. In order to find the optimal value, a GA optimization is run and the result suggests that the peak value of UFII is 0.4340 when 16.249 MW of solar PV power is injected on bus 14 only.

B. *GA Optimization of Case 14 for the 5005th Hour of the Year in Environmentally Ideal Conditions*

The results of the environmetally ideal case for the 5005th hour of the year is analyzed. The population size for the GA is defined as 200 where elite count is set to 10. Crossover fraction is set as 0.8 and the stopping criteria for function tolerance is set to 0.001. The optimization converged to the final value after 51 iterations which took 24 minutes of computational time. The results are displayed in Fig. 3 and Table I:

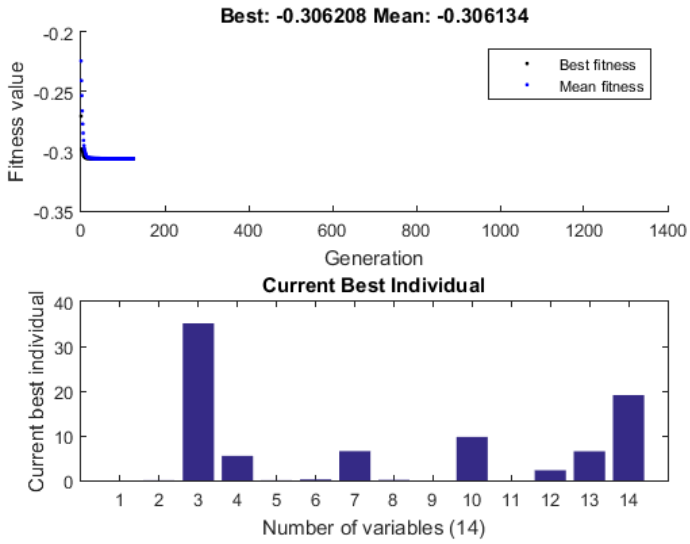

Fig. 5. Graphical results of the GA optimization with ideal environmental conditions.

TABLE I. Optimal sizing of solar PV on each bus with ideal environmental conditions.

Bus:	Solar PV Capacity (MWp):
1	0
2	0.032
3	35.158
4	5.5
5	0.043
6	0.226
7	6.568
8	0.124
9	0
10	9.735
11	0
12	2.268
13	6.519
14	19.084
Total (MWp):	**85.257**
UFII:	**0.306208**

The results suggest to install a total solar PV capacity of 85.257 MWp, distributed among buses as shown in Table I in order to achieve the maximal UFII value of 0.306208. As a note, the highest amount of solar PV power on one bus is suggested as being 35.158 on Bus 3.

C. *GA Optimization of Case 14 for the 5005th Hour of the Year with Cloudy Weather on One Bus*

Here, a cloudy weather is simulated on the bus which was recommended to have the highest proportion of solar PV power previously. Keeping the same optimization settings, the

14-design variable GA optimization converged to the final value after 53 iterations which took 25 minutes of computational time. The results are displayed in Fig. 4 and Table II:

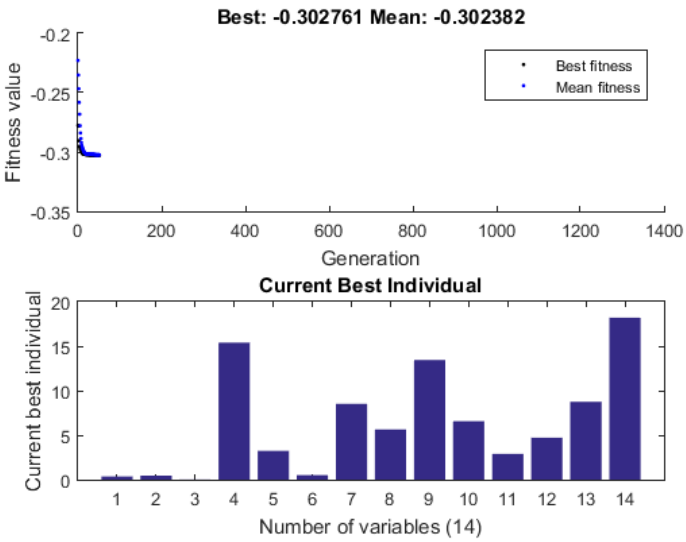

Fig. 6. Graphical results of the GA optimization with cloudy weather on Bus 3.

TABLE II. Optimal sizing of solar PV on each bus with cloudy weather on Bus 3.

Bus:	Solar PV Capacity (MWp):
1	0.363
2	0.446
3	0.025
4	15.404
5	3.242
6	0.519
7	8.522
8	5.643
9	13.44
10	6.572
11	2.906
12	4.712
13	8.749
14	18.203
Total (MWp):	**88.746**
UFII:	**0.302761**

Because of the drop in the solar PV generation due to the cloudy weather, the new results suggest only 0.025 MWp of solar PV capacity to be installed on Bus 3. The distribution has changed and the resultant total solar PV capacity has changed to 88.746 MWp now. There is an about 1.13% drop in UFII value in the latter case. It can be concluded here that the uncertainties due to environmental changes have a negative impact on the UFII metric.

This analysis is a scenario based optimization focusing on a specific hour of the year, i.e. one with no clouds and another with a cloudy region.

IV. Conclusion

The main objective of this paper is to prove the usefulness and applicability of the new definition, UFII for finding the optimal sizing and positioning of solar PV power plants in a power network.

The method and procedure explained in this paper is not an uncertainty analysis. Modelling and integration of uncertainties are to be completed as further works on this research. One idea is to run the GA optimization on critical times of the year, e.g. peak load, peak solar PV generation times. The results will then be compared and analysed in order to get more solid results sticking to the same technique explained in this paper.

The optimization has many variables meaning it will have tonnes of different variations of results thus not a single correct result is expected. However, uncertainty quantification and error estimations will be conducted in further works in order to check how close to the best combination the result of the optimization is.

Because it differs every year, selecting 1 year's irradiance results for obtaining the generation data as explained in Section B. will not give the best result. However, this can be improved by collecting data from an older system for a longer period of time and by taking the average.

The novel definition of "Unit Financial Impact Indicator" is found to be an effective way of finding the optimal sizing and location of solar PV power plants. This research is focused on "14-bus IEEE power grid" but the method is proven to be applicable on power networks which are within the scope of GA convergence.

References

[1] Patelli, E.; Broggi, M.; Tolo, S. & Sadeghi, J. "COSSAN software a multidisciplinary and collaborative software for uncertainty quantification," *2nd International Conference on Uncertainty Quantification in Computational Sciences and Engineering,* 2017, *Eccomas Proceedia ID: 5364*, 212-224, DOI: 10.7712/120217.5364.16982

[2] Patelli, E., "COSSAN: A Multidisciplinary Software Suite for Uncertainty Quantification and Risk Management. In Handbook of Uncertainty Quantification" Ghanem, R.; Higdon, D. & Owhadi, H. *(Eds.)* v*Springer International Publishing,* 2016, 1-69, DOI: 10.1007/978-3-319-11259-6_59-1

[3] R. Rocchetta, Y.F. Li, and E. Zio, "Risk assessment and risk-cost optimization of distributed power generation systems considering extreme weather conditions," Reliability Engineering and System Safety, vol. 136, pp. 47-61, 2015.

[4] C. Taliotis, E. Taibi, M. Howells, H. Rogner, M. Bazilian, and M. Welsch, "Renewable energy technology integration for the island of

Cyprus: A cost-optimization approach," Energy, vol. 137, pp. 31-41, 2017.

[5] M. Aien, M. Rashidinejad, and M. Fotuhi-Firuzabad, "On possibilistic and probabilistic uncertainty assessment of power flow problem: A review and a new approach," Renewable and Sustainable Energy Reviews, vol. 37, pp. 883-895, 2014.

[6] R. Mena, M. Hennebel, Y. Li, C. Ruiz, and E. Zio, "A risk-based simulation and multi-objective optimization framework for the integration of distributed renewable generation and storage," Renewable and Sustainable Energy Reviews, vol. 37, pp. 778-793, 2014.

[7] Rich Christie, "Power Systems Test Case Archive," Aug. 1993, [Accessed Oct. 25, 2017]. [Online]. Available:http://www.ee.washington.edu/research/pstca/pf14/pg_tca14bus.htm

[8] R. Rocchetta, E. Zio, and E. Patelli, "A Power-Flow Emulator Approach for Resilience Assessment of Repairable Power Grids subject to Weather-Induced Failures and Data Deficiency," *Applied Energy,* in press. https://doi.org/10.1016/j.apenergy.2017.10.126

[9] *Budgeting for solar PV plant operations & maintenance: Practices and prices.* Electric Power Research Institute, Palo Alto CA: 2015.

[10] Dumitrescu, D., B. Lazzerini, L. C. Jain, and A. Dumitrescu. 2000. Evolutionary computation. The CRC Press International Series on Computational Intelligence. CRC Press.

[11] M. Sedighizadeh, and A. Rezazadeh, "Using genetic algorithm for distributed generation allocation to reduce losses and improve voltage profile," World Academy of Science, Engineering and Technology, vol. 37, pp. 521-526, 2008.

[12] R. D. Zimmerman, C. E. Murillo-Sánchez, and R. J. Thomas, "MATPOWER: Steady-State Operations, Planning and Analysis Tools for Power Systems Research and Education," *Power Systems, IEEE Transactions on*, vol. 26, no. 1, pp. 12-19, Feb. 2011

[13] T. Bouktir, L. Slimani, and M. Belkacemi, "A genetic algorithm for solving the optimal power flow problem," Leonardo Journal of Sciences, vol. 4, pp. 44-58, 2004.